AUTOMATIC TRANSMISSION F4A41, F4A42, F4A51

CONTENTS

NOTES

GENERAL INFORMATION

(1) The combination of highest-precision electronic and mechanical technology heralds a new era in automatic transmission performance.
(2) The gear shifting clutches use a hydraulic balancing mechanism to enable gear shifting at extra-high engine speeds.
(3) The number of shafts has been decreased to two, increased use has been made of metal plates and the one-way clutch has been abolished, which all contribute to reduce the weight.
(4) Increased meshing ratios and improved rigidity of the gear supports and casing result in less noise.
(5) The number of oil cooler feed tubes is increased to two.

3-DIMENSIONAL CROSS-SECTION

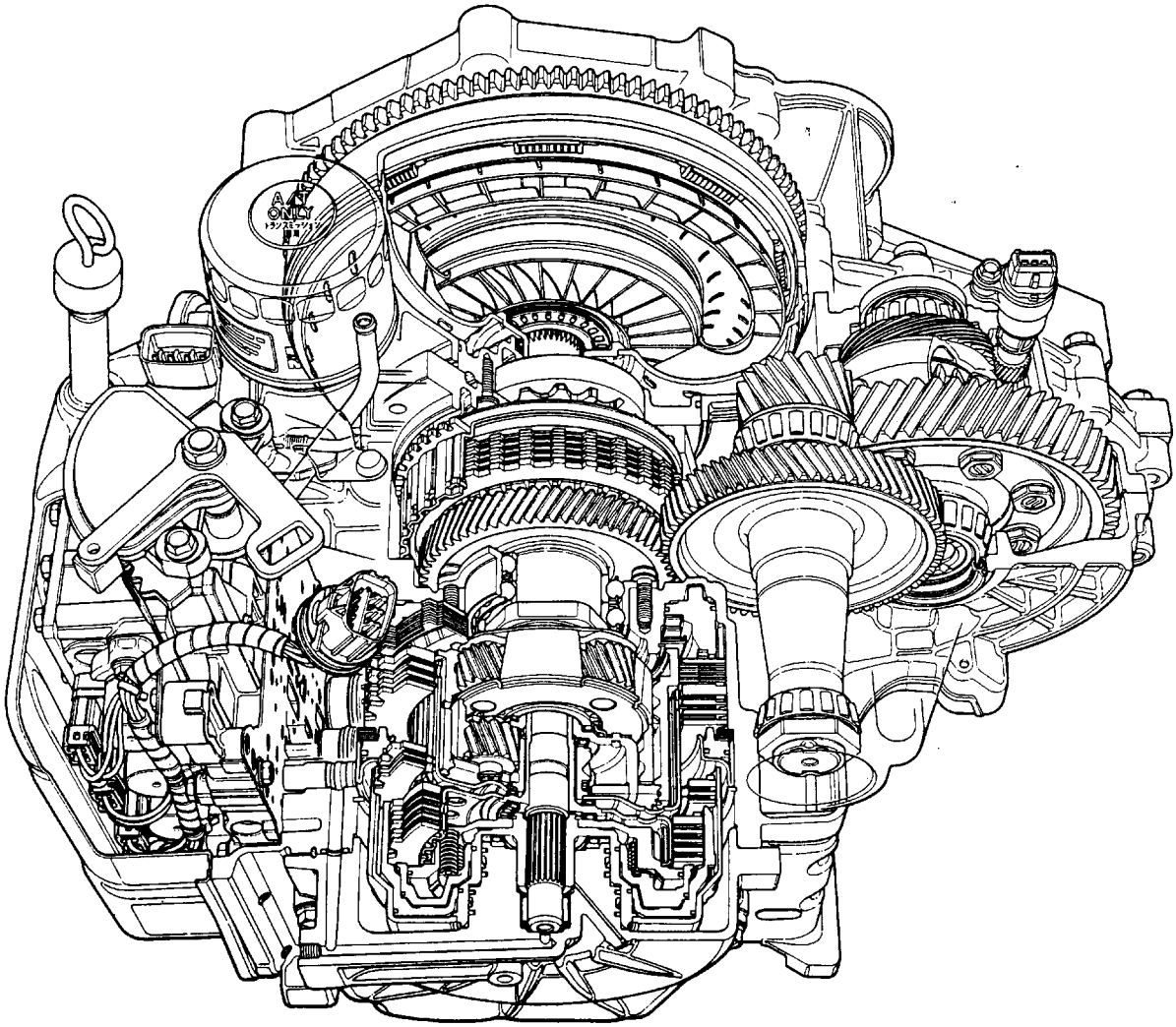

TFA1502

SECTIONAL VIEW

<F4A41 up to Dec. 1997>

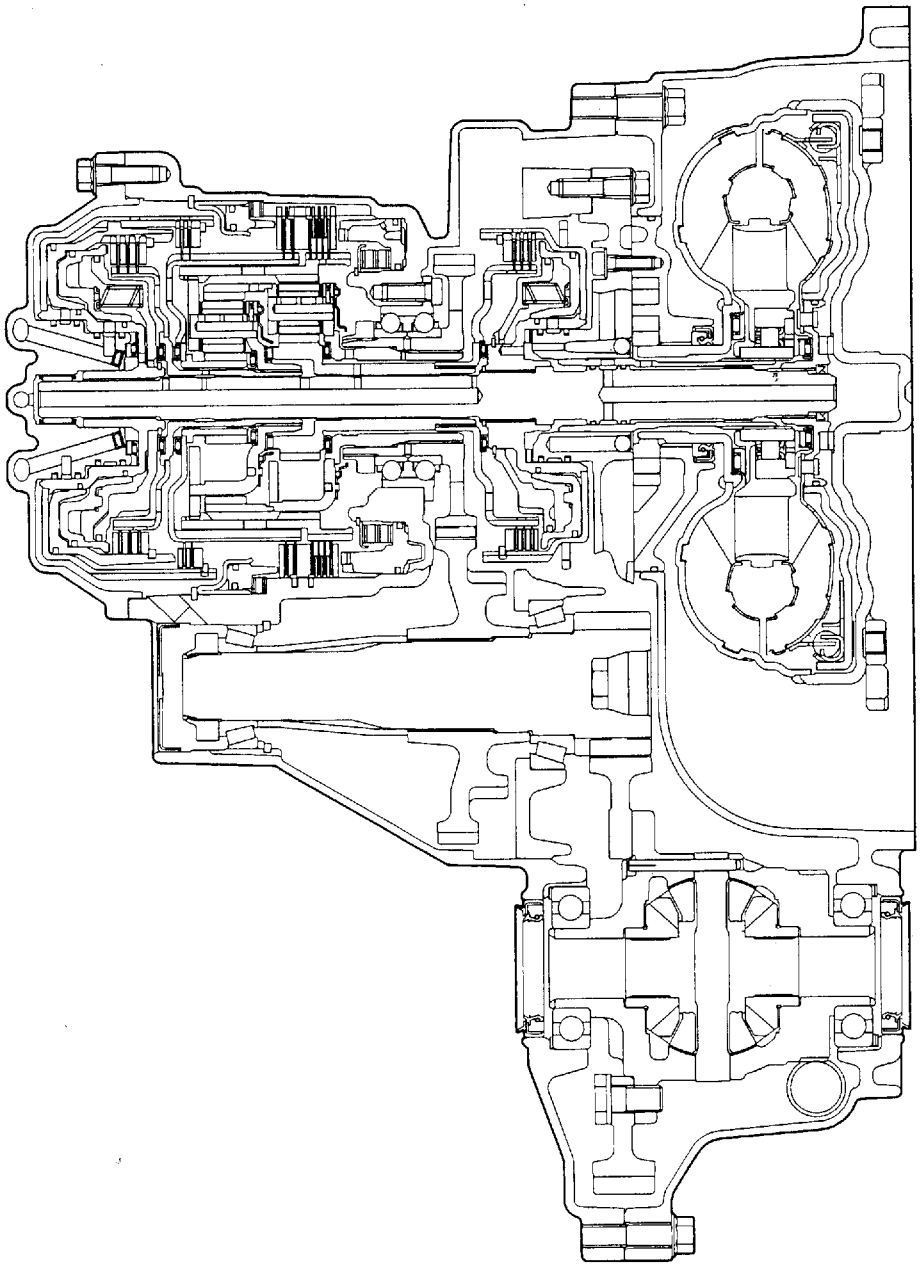

TFA1548

<F4A41 from Jan. 1998>

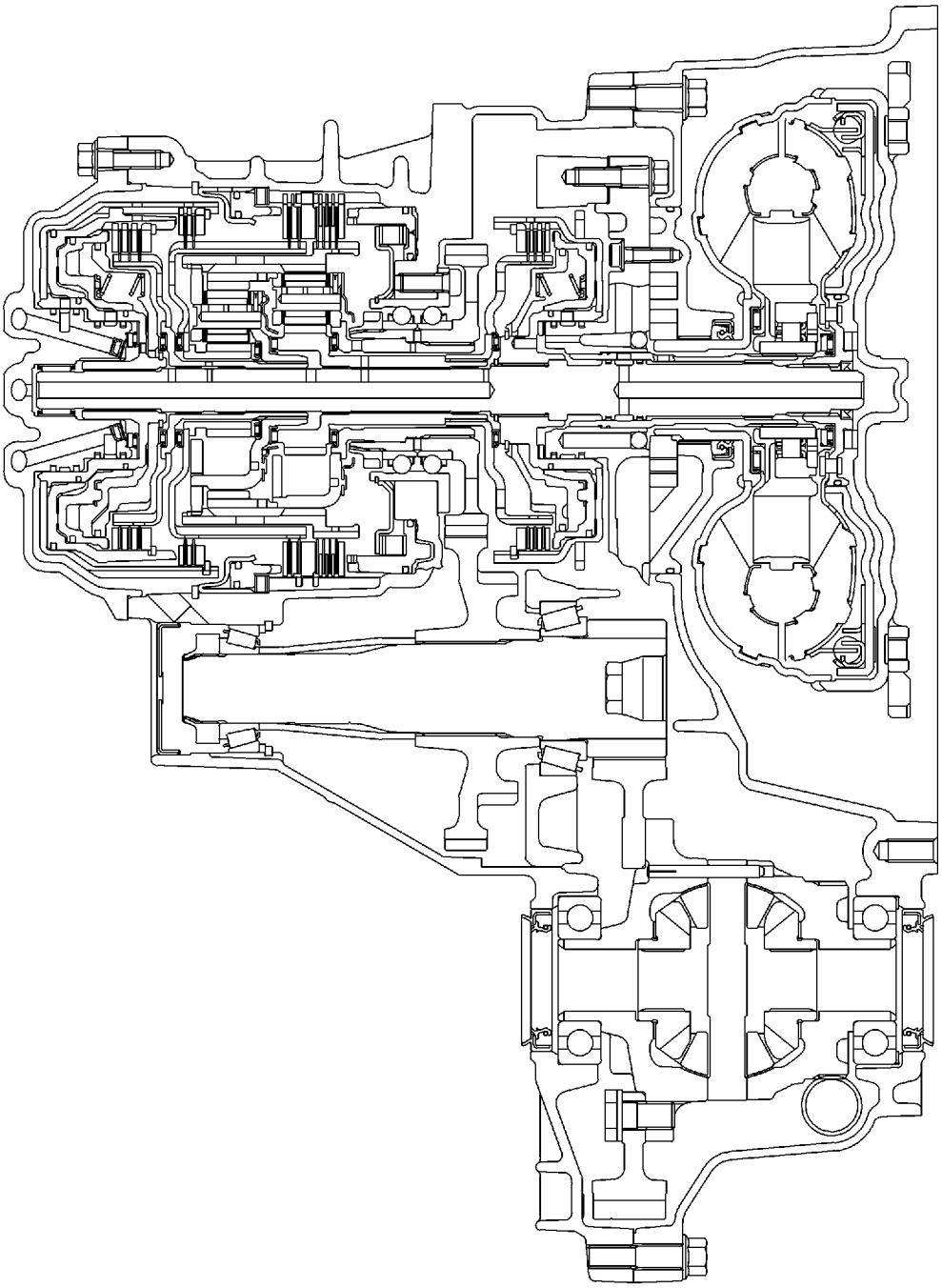

TFA2252

<F4A42-1 up to Dec. 1997>

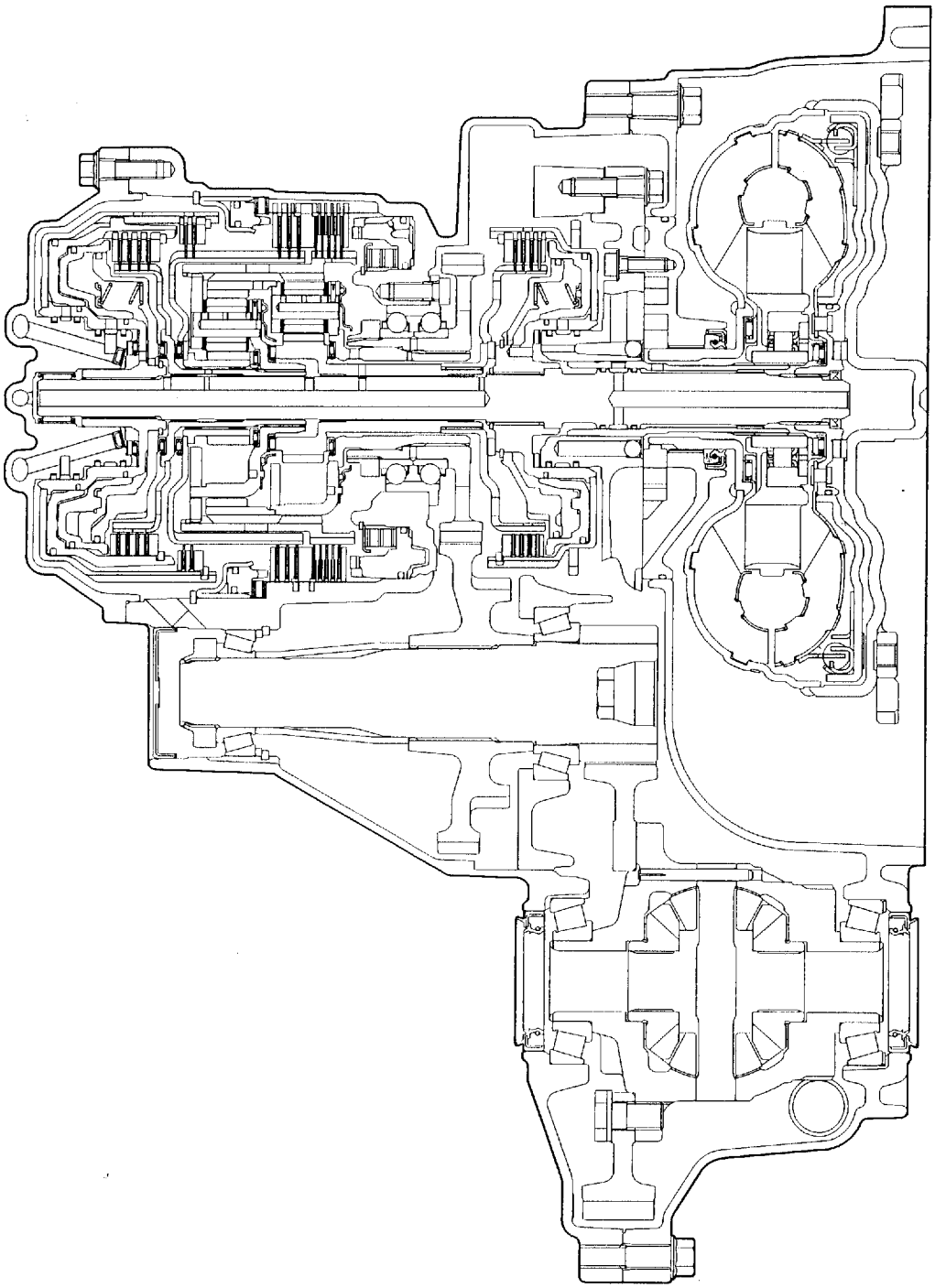

TFA1503

<F4A42-1 from Jan. 1998>

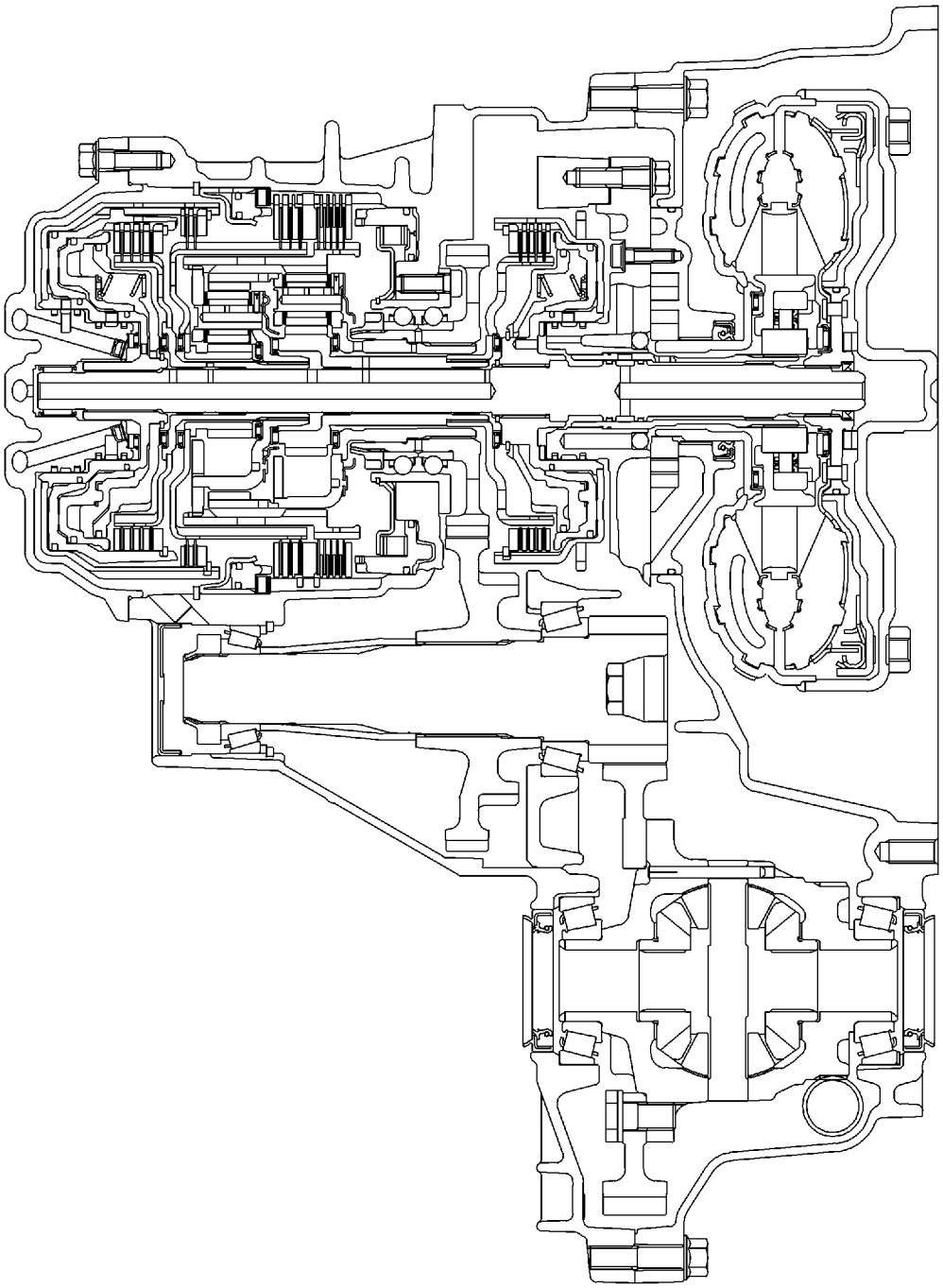

TFA2253

<F4A42-2 without one-way clutch>

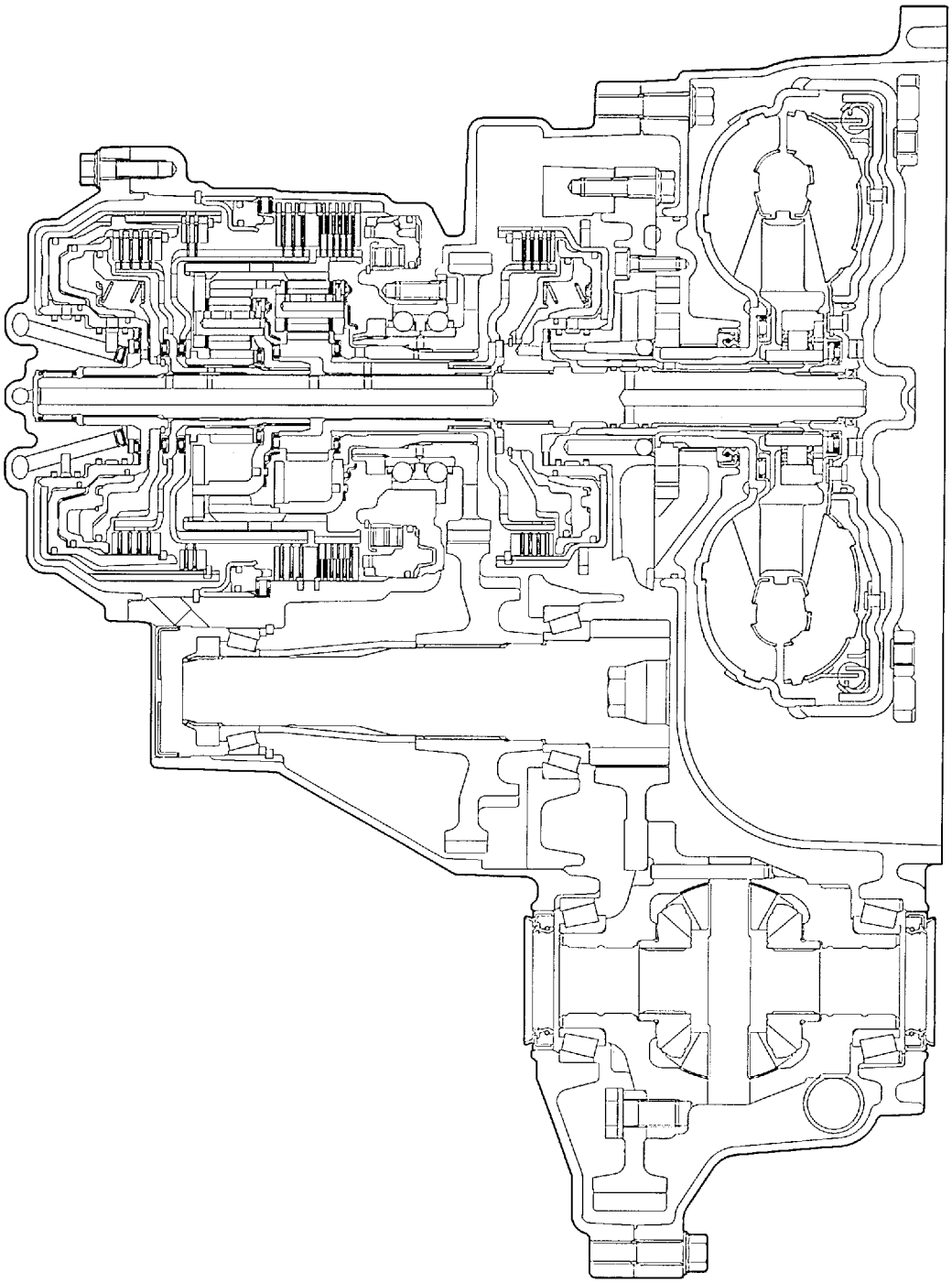

TFA1504

<F4A42-2 with one-way clutch>

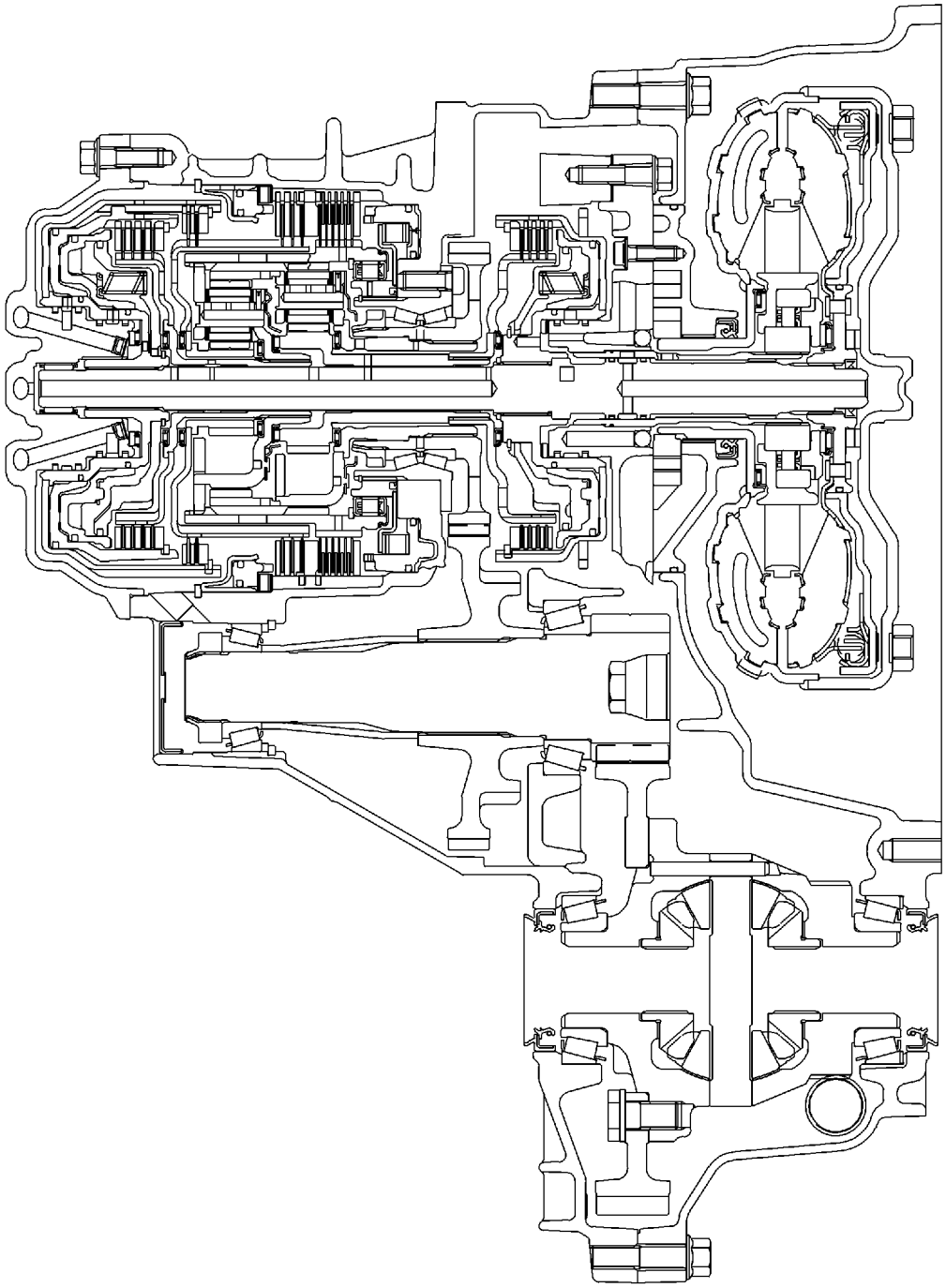

TFA2254

Intentionally blank

<F4A51>

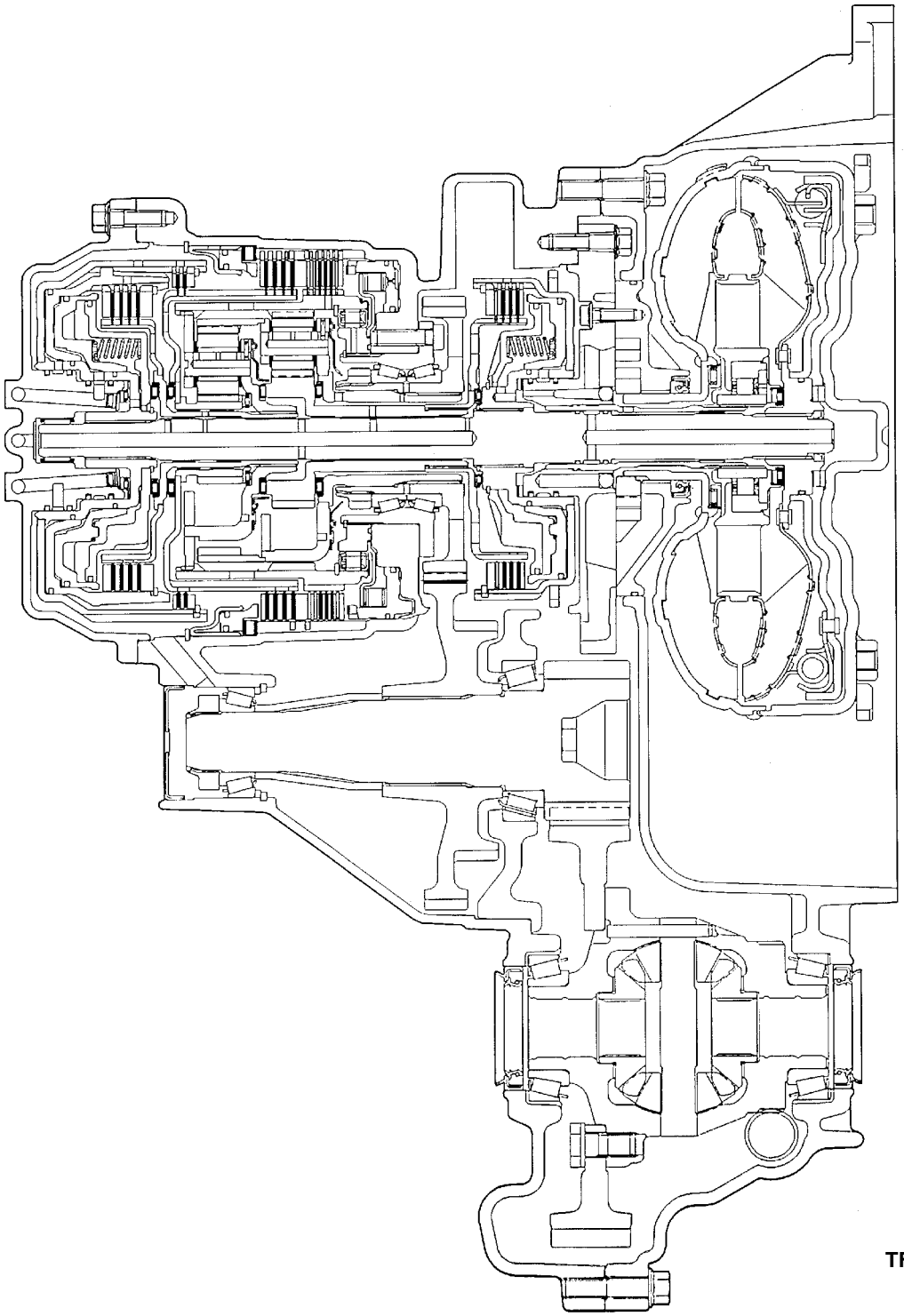

TFA1995

HYDRAULIC CIRCUIT

Type with external oil filter

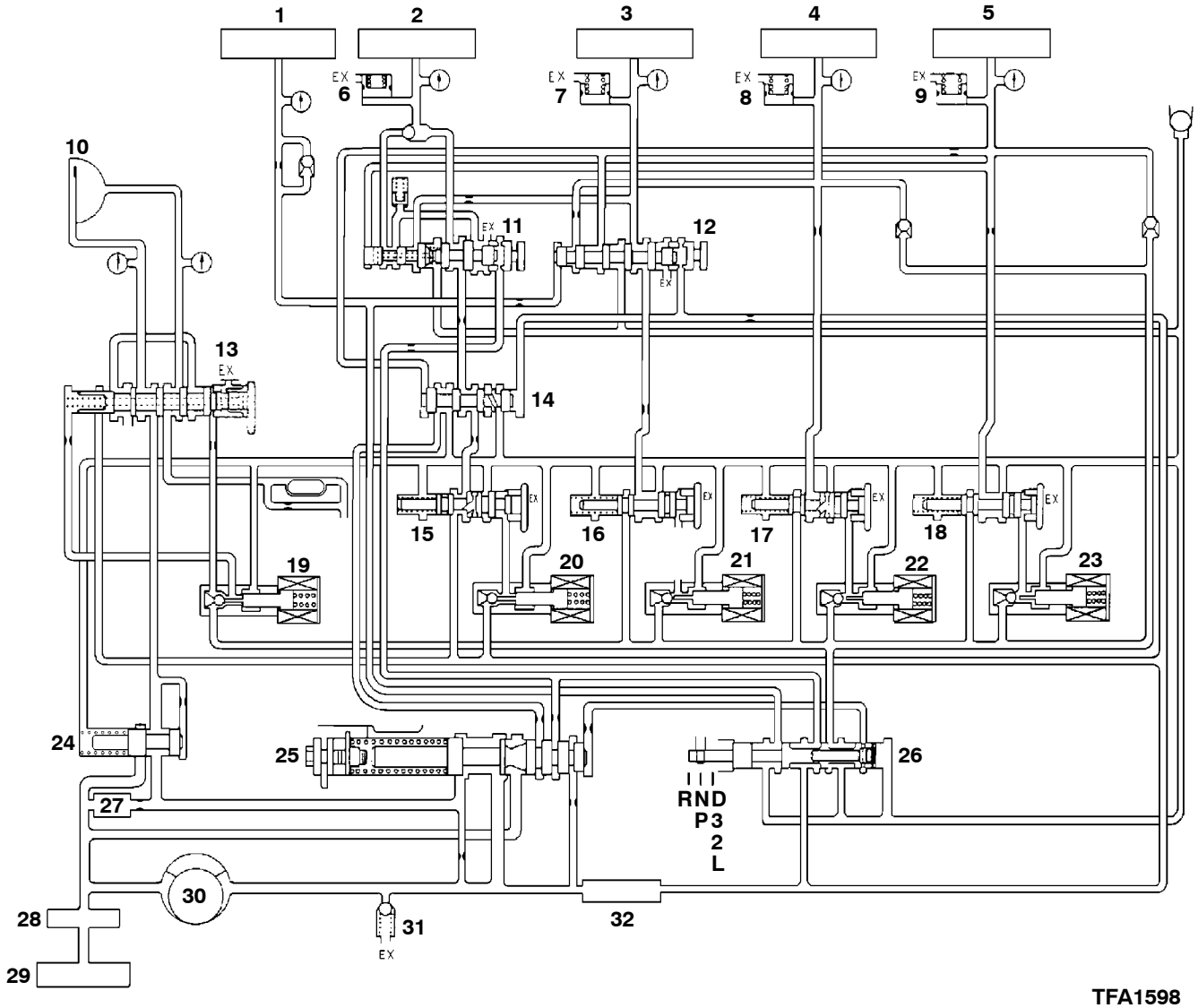

TFA1598

1. Reverse clutch
2. Low-reverse brake
3. Second brake
4. Underdrive clutch
5. Overdrive clutch
6. Low-reverse accumulator
7. Second accumulator
8. Underdrive accumulator
9. Overdrive accumulator
10. Damper clutch
11. Fail-safe valve A
12. Fail-safe valve B
13. Damper clutch control valve
14. Switching valve
15. Low-reverse pressure control valve
16. Second pressure control valve
17. Underdrive pressure control valve
18. Overdrive pressure control valve
19. Damper clutch control solenoid valve
20. Low-reverse solenoid valve
21. Second solenoid valve
22. Underdrive solenoid valve
23. Overdrive solenoid valve
24. Torque converter pressure control valve
25. Regulator valve
26. Manual valve
27. Oil filter
28. Oil filter
29. Oil pan
30. Oil pump
31. Relief valve
32. Oil strainer

HYDRAULIC CIRCUIT

Type without external oil filter

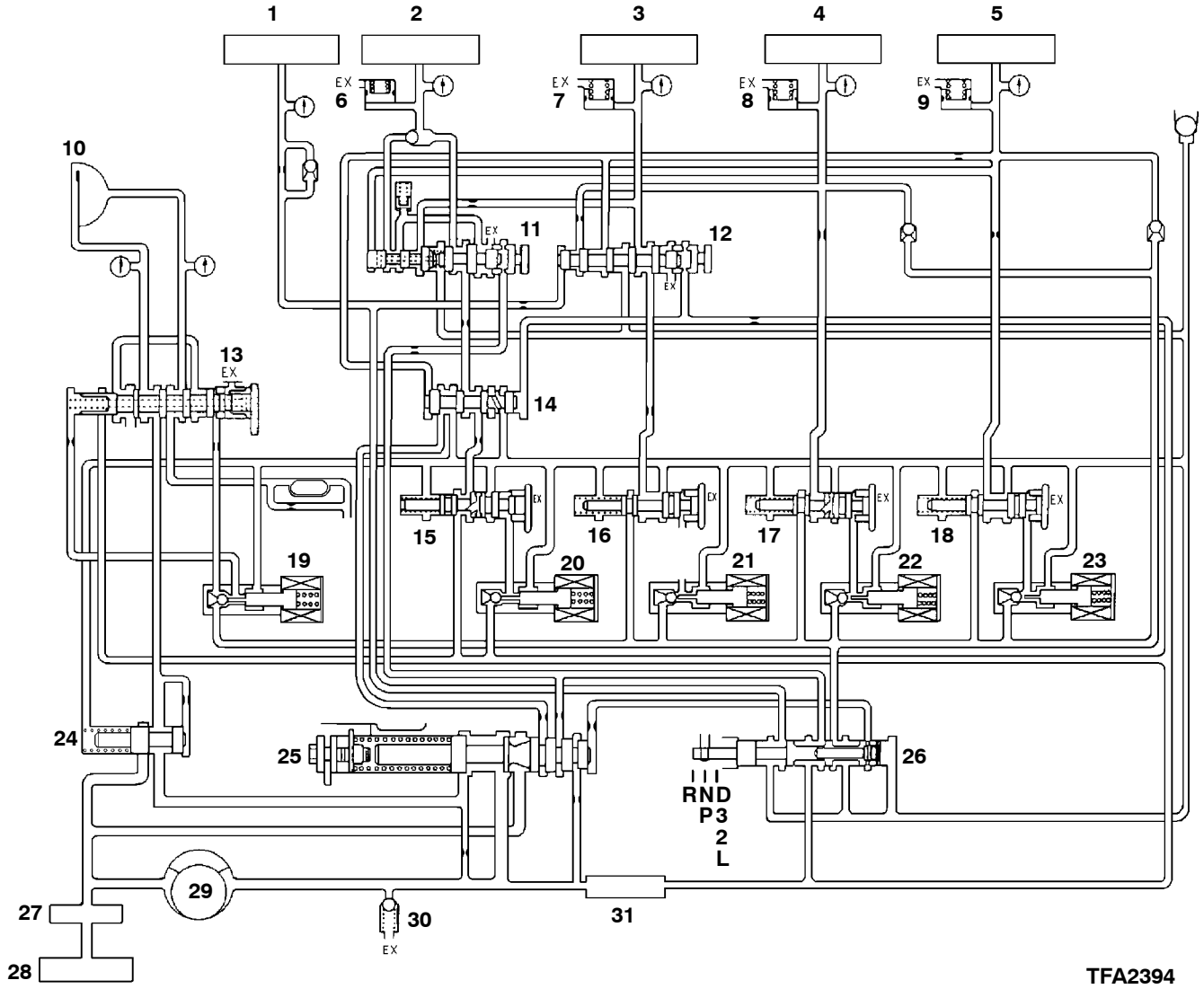

1. Reverse clutch
2. Low-reverse brake
3. Second brake
4. Underdrive clutch
5. Overdrive clutch
6. Low-reverse accumulator
7. Second accumulator
8. Underdrive accumulator
9. Overdrive accumulator
10. Damper clutch
11. Fail-safe valve A
12. Fail-safe valve B
13. Damper clutch control valve
14. Switching valve
15. Low-reverse pressure control valve
16. Second pressure control valve
17. Underdrive pressure control valve
18. Overdrive pressure control valve
19. Damper clutch control solenoid valve
20. Low-reverse solenoid valve
21. Second solenoid valve
22. Underdrive solenoid valve
23. Overdrive solenoid valve
24. Torque converter pressure control valve
25. Regulator valve
26. Manual valve
27. Oil filter
28. Oil pan
29. Oil pump
30. Relief valve
31. Oil strainer

1. SPECIFICATIONS

TRANSMISSION MODEL TABLE

MODEL 1996

Transmission model		Speedometer gear ratio	Final gear ratio	Vehicle model	Engine model
EUR	F4A41-1-MRA	31/36	4.042	DA1A	4G92
	F4A41-1-M8A1	31/36	4.042	CJ4A, CK4A	4G92
	F4A41-1-M8A2	31/36	4.042	CJ1A	4G13
	F4A42-1-MRA	31/36	4.042	DA2A	4G93
EXP	F4A41-1-M8A	31/36	4.042	CJ2A	4G15
	F4A41-1-M8A1	31/36	4.042	CJ4A	4G92
	F4A41-1-M8A4	31/36	4.042	CK2A	4G15
	F4A41-1-M8A5	31/36	4.042	CK1A	4G13

MODEL 1997

Transmission model		Speedometer gear ratio	Final gear ratio	Vehicle model	Engine model
EUR	F4A42-1-M7A	30/36	4.042	EA2A, EA2W	4G63
	F4A42-2-E6A	29/36	3.770	EA5A, EA5W	6A13
EXP	F4A42-1-M6A	29/36	4.042	EA1A	4G93
	F4A42-1-M6A2	29/36	4.042	EA2A	4G63
	F4A42-1-M7A	30/36	4.042	EA2A	4G63
	F4A42-1-U6A1	29/36	4.407	EA4A	6A12
	F4A42-2-E6A	29/36	3.770	EA5A	6A13
	F4A51-2-E5B	28/36	3.735	F36A	6G72

MODEL 1998

Transmission model		Speedometer gear ratio	Final gear ratio	Vehicle model	Engine model
EUR	F4A41-1-M8A1	31/36	4.042	CJ4A	4G92
	F4A41-1-M8A5	31/36	4.042	CJ1A, CK1A	4G13
	F4A41-1-M8A6	31/36	4.042	DA1A	4G92
	F4A42-1-E8A	31/36	3.770	DA2A	4G93-GDI
	F4A42-1-M7A	30/36	4.042	EA2A, EA2W	4G63
	F4A42-1-M8A3	31/36	4.042	DA2A	4G93
	F4A42-2-E6A	29/36	3.770	EA5A, EA5W	6A13

Transmission model		Speedometer gear ratio	Final gear ratio	Vehicle model	Engine model
EXP	F4A41-1-M8A1	31/36	4.042	CJ4A, CK4A	4G92
	F4A41-1-M8A4	31/36	4.042	CJ2A, CK2A	4G15
	F4A41-1-M8A5	31/36	4.042	CK1A	4G13
	F4A42-1-M6A	29/36	4.042	EA1A	4G93
	F4A42-1-M6A2	29/36	4.042	EA2A	4G63
	F4A42-2-E6A	29/36	3.770	EA5A	6A13
	F4A51-2-E5B	28/36	3.735	F36A	6G72

MODEL 1999

Transmission model		Speedometer gear ratio	Final gear ratio	Vehicle model	Engine model
EUR	F4A42-1-U5A1	28/36	4.407	N61W	4G93-GDI
	F4A42-2-E6B	29/36	3.770	EA3A, EA3W	4G64-GDI
	F4A42-2-E6B1	29/36	3.770	EA5A, EA5W	6A13
	F4A42-2-M5B1	28/36	4.042	N84W	4G64-GDI
EXP	F4A42-2-E6B1	29/36	3.770	EA5A	6A13
	F4A42-2-M5B	28/36	4.042	N84W	4G64-S4

MODEL 2000

Transmission model		Speedometer gear ratio	Final gear ratio	Vehicle model	Engine model
EUR	F4A41-1-M8A1	31/36	4.042	CJ4A	4G92
	F4A41-1-M8A5	31/36	4.042	CJ1A	4G13
	F4A41-1-U8A2	31/36	4.407	DA1A	4G92
	F4A42-1-M7A1	30/36	4.042	DA2A	4G93
	F4A42-1-U5A2	28/36	4.407	N63W	4G63
	F4A42-2-M5B1	28/36	4.042	N64W, M84W	4G64
EXP	F4A41-1-M8A1	31/36	4.042	CJ4A, CK4A	4G92
	F4A41-1-M8A4	31/36	4.042	CJ2A, CK2A	4G15
	F4A41-1-M8A5	31/36	4.042	CJ1A, CK1A	4G13
	F4A42-1-M6A	29/36	4.042	EA1A	4G93
	F4A42-1-M6A2	29/36	4.042	EA2A	4G63
	F4A42-2-E6B1	29/36	3.770	EA5A	6A13
	F4A42-2-M5B	28/36	4.042	N84W	4G64

Transmission model		Speedometer gear ratio	Final gear ratio	Vehicle model	Engine model
AUS	F4A42-2-M5B	28/36	4.042	N84W	4G64

MODEL 2001

Transmission model		Speedometer gear ratio	Final gear ratio	Vehicle model	Engine model
EUR	F4A42-1-NZA1	–	4.406	N63W	4G63
	F4A42-2-JZB2	–	4.041	N64W	4G64
	F4A41-1-J8A	31/36	4.041	CJ4A	4G92
	F4A42-1-J8A	31/36	4.041	DG5A	4G93
	F4A41-1-N7A	30/36	4.406	DA1A	4G92
	F4A42-1-J7A	30/36	4.041	DA2A	4G93
	F4A42-1-J6A	29/36	4.041	EA2A, W	4G63
	F4A42-2-F6B	29/36	3.769	EA3A, W	4G64
	F4A42-2-F6B1	29/36	3.769	EA5A, W	6A13
EXP	F4A42-1-JZA	–	4.041	EA2W	4G63
	F4A42-2-JZB1	–	4.041	N84W	4G64
	F4A42-2-FZB2	–	3.769	N84W	4G64
	F4A41-1-J8A	31/36	4.041	CJ4A	4G92
	F4A41-1-J8A1	31/36	4.041	CJ2A	4G15
	F4A41-1-J8A	31/36	4.041	CJ4A	4G92
	F4A42-1-JZA2	–	4.041	EA1A	4G93
	F4A42-1-JZA	–	4.041	EA2A	4G63
	F4A42-1-FZB	–	3.769	EA5A	6A13
MMAL	F4A41-1-M8A1	31/36	4.042	CJ2A	4G15
	F4A42-1-J8A1	31/36	4.041	CJ5A	4G93
	F4A42-2-JZB1	–	4.041	N84W	4G64

MODEL 2002

Transmission model		Speedometer gear ratio	Final gear ratio	Vehicle model	Engine model
EUR	F4A41-1-NZA2	–	4.406	DG3A	4G15-S4
	F4A41-1-NZA	–	4.406	DA1A	4G92-S4
	F4A42-1-NZA3	–	4.406	DG5A, DA2A	4G93-GDI
EXP	F4A42-1-JZA2	–	4.041	EA1A	4G93-S4
	F4A42-1-JZA	–	4.041	EA2A, W	4G63-S4
	F4A42-2-FZB	–	3.769	EA5A	6A13-S4
	F4A42-1-JZA1	–	4.041	EA7A	4G94-GDI
MMAL	F4A42-2-JZB	–	4.041	CS6A	4G94-GDI

MODEL 2003

Transmission model		Speedometer gear ratio	Final gear ratio	Vehicle model	Engine model
EUR	F4A41-1-NZA	–	4.406	DA1A	4G92-S4
	F4A42-1-JZA3	–	4.041	DA2A	4G93-GDI
	F4A41-1-NZA2	–	4.406	DG3A	4G18-S4
	F4A42-1-NZA2	–	4.406	DG5A	4G93-S4
	F4A42-2-JZB2	–	4.041	N84W	4G64-GDI
EXP	F4A42-2-JZB1	–	4.041	N84W	4G64-S4
	F4A42-2-FZB2	–	3.769	N84W	4G64-GDI
MMAL	F4A42-2-JZB1	–	4.041	N84W	4G64-S4

GENERAL SPECIFICATIONS

Items		F4A41	F4A42-1	F4A42-2	F4A51
Torque converter type		3-element, 1-stage, 2-phase type	3-element, 1-stage, 2-phase type	3-element, 1-stage, 2-phase type	3-element, 1-stage, 2-phase type
Transmission type		4-speed forward, 1-speed reverse	4-speed forward, 1-speed reverse	4-speed forward, 1-speed reverse	4-speed forward, 1-speed reverse
Gear ratio	1st	2.842	2.842	2.842	2.842
	2nd	1.529	1.529	1.529	1.495
	3rd	1.000	1.000	1.000	1.000
	4th	0.712	0.712	0.712	0.731
	Reverse	2.480	2.480	2.480	2.720
Number of underdrive clutch disc		3	4	4	4
Number of overdrive clutch disc		3	4	4	4
Number of reverse clutch disc		2	2	2	2
Number of low-reverse brake disc		4	5	6	6
Number of second brake disc		2	3	3	4

SERVICE SPECIFICATIONS

Items		Standard value
Output shaft preload mm		0.01 – 0.09
Brake reaction plate end play mm		0 – 0.16
Low-reverse brake end play mm	F4A41	1.05 – 1.51
	F4A42-1	1.35 – 1.81
	F4A51, F4A42-2	1.65 – 2.11
Second brake end play mm	F4A41	0.49 – 0.95
	F4A42	0.79 – 1.25
	F4A51	1.09 – 1.55
Underdrive sun gear end play mm		0.25 – 0.45
Input shaft end play mm		0.70 – 1.45
Differential case end play mm	F4A41	0.045 – 0.165
Differential case preload mm	F4A42, F4A51	0.045 – 0.105
Underdrive clutch end play mm	F4A41	1.2 – 1.4
	F4A42, F4A51	1.6 – 1.8
Reverse and overdrive clutch return spring retainer end play mm		0 – 0.09
Overdrive clutch end play mm	F4A41	1.2 – 1.4
	F4A42, F4A51	1.6 – 1.8
Reverse clutch end play mm		1.5 – 1.7
Backlash between differential side gear and pinion mm		0.025 – 0.150

VALVE BODY SPRING IDENTIFICATION TABLE

mm

Spring	Wire diameter	Outside diameter	Free length	Number of loops
Regulator valve spring	1.8	15.7	86.7	24
Underdrive pressure control valve spring	0.7	7.6	37.7	25
Overdrive pressure control valve spring	0.7	7.6	37.7	25
Low-reverse pressure control valve spring	0.7	7.6	37.7	25
Second pressure control valve spring	0.7	7.6	37.7	25
Torque converter spring	1.6	11.2	34.4	12.5
Damper clutch control valve spring	0.7	5.9	28.1	19
Fail-safe valve A spring	0.7	8.9	21.9	9.5
Damping valve spring	1.0	7.7	35.8	17
Line relief valve spring	1.0	7.0	17.3	10
Orifice check ball spring	0.5	4.5	17.2	15

SNAP RING, SPACER, THRUST WASHER, THRUST RACE AND PRESSURE PLATE FOR ADJUSTMENT

Part name	Thickness mm	Identification symbol	Part No.
Thrust washer (For adjustment of input shaft end play)	1.8	18	MD754509
	2.0	20	MD754508
	2.2	22	MD754507
	2.4	24	MD753793
	2.6	26	MD753794
	2.8	28	MD753795
Snap ring: F4A41, F4A42 (For adjustment of underdrive clutch and overdrive clutch end plays)	1.6	None	MD759666
	1.7	Blue	MD759667
	1.8	Brown	MD759668
	1.9	None	MD752124
	2.0	Blue	MD752125
	2.1	Brown	MD752126
	2.2	None	MD752127
	2.3	Blue	MD752128
	2.4	Brown	MD752129
	2.5	None	MD752130
	2.6	Blue	MD752131
	2.7	Brown	MD752132
	2.8	None	MD752133
	2.9	Blue	MD752134
	3.0	Brown	MD754680
Snap ring: F4A51 (For adjustment of underdrive clutch and overdrive clutch end plays)	1.6	Brown	MD759960
	1.7	None	MD759961
	1.8	Blue	MD759962
	1.9	Brown	MD759963
	2.0	None	MD750841
	2.1	Blue	MD750842
	2.2	Brown	MD750843
	2.3	None	MD750844
	2.4	Blue	MD750845
	2.5	Brown	MD750846
	2.6	None	MD750847
	2.7	Blue	MD750848
	2.8	Brown	MD750849
	2.9	None	MD750850
	3.0	Blue	MD750851
Snap ring: F4A41, F4A42 (For adjustment of low-reverse brake and second brake reaction plates end plays)	2.2	Blue	MD754786
	2.3	Brown	MD754787
	2.4	None	MD758240
	2.5	Blue	MD758241

Part name	Thickness mm	Identification symbol	Part No.
Snap ring: F4A51 (For adjustment of low-reverse brake and second brake reaction plates end plays)	2.2	None	MD756784
	2.3	Blue	MD756785
	2.4	Brown	MD758552
	2.5	None	MD758553
Pressure plate: F4A41, F4A42 (For adjustment of low-reverse brake and second brake end play)	1.6	L	MD759567
	1.8	1	MD759414
	2.0	0	MD759415
	2.2	2	MD759416
	2.4	4	MD759417
	2.6	6	MD759418
	2.8	8	MD759419
	3.0	D	MD759420
Pressure plate: F4A51 (For adjustment of low-reverse brake and second brake end play)	1.6	F	MD759568
	1.8	E	MD759425
	2.0	D	MD759426
	2.2	C	MD759427
	2.4	B	MD759428
	2.6	A	MD759429
	2.8	0	MD759430
	3.0	1	MD759431
Snap ring: F4A41, F4A42 (For adjustment of reverse clutch end play)	1.6	None	MD761085
	1.7	Blue	MD761086
	1.8	Brown	MD761087
	1.9	None	MD752137
	2.0	Blue	MD752138
	2.1	Brown	MD752139
	2.2	None	MD752140
	2.3	Blue	MD752141
	2.4	Brown	MD752142
	2.5	None	MD752143
	2.6	Blue	MD752144
	2.7	Brown	MD752145
	2.8	None	MD752146

Part name	Thickness mm	Identification symbol	Part No.
Snap ring: F4A51 (For adjustment of reverse clutch end play)	1.6	None	MD761008
	1.7	Blue	MD761089
	1.8	Brown	MD761090
	1.9	None	MD758947
	2.0	Blue	MD756690
	2.1	Brown	MD756691
	2.2	None	MD756692
	2.3	Blue	MD756693
	2.4	Brown	MD756694
	2.5	None	MD756695
	2.6	Blue	MD756696
	2.7	Brown	MD756697
	2.8	None	MD756698
Snap ring (For adjustment of reverse clutch and overdrive clutch spring retainers end plays)	1.48	Brown	MD755600
	1.53	None	MD755601
	1.58	Blue	MD755602
	1.63	Brown	MD755603
Thrust race (For adjustment of underdrive sun gear end play)	1.6	-	MD707267
	1.7	-	MD759681
	1.8	-	MD723064
	1.9	-	MD754794
	2.0	-	MD707268
	2.1	-	MD754795
	2.2	-	MD723065
	2.3	-	MD754796
	2.4	-	MD724358
	2.5	-	MD754797
	2.6	-	MD754798

Part name	Thickness mm	Identification symbol	Part No.
Spacer (For adjustment of output shaft preload)	1.88	88	MD756579
	1.92	92	MD756580
	1.96	96	MD756581
	2.00	00	MD756582
	2.04	04	MD756583
	2.08	08	MD756584
	2.12	12	MD756585
	2.16	16	MD756586
	2.20	20	MD756587
	2.24	24	MD756588
	2.28	28	MD756589
	2.32	32	MD756590
	2.36	36	MD756591
	2.40	40	MD756592
	2.44	44	MD756593
	2.48	48	MD756594
	2.52	52	MD756595
	2.56	56	MD756596
	2.60	60	MD756597
	2.64	64	MD756598
	2.68	68	MD756599
	2.72	72	MD760685
	2.76	76	MD760686
Spacer: F4A41 (For adjustment of differential case end play)	1.28	N	MD710458
	1.37	P	MD710460
	1.46	R	MD710462
	1.55	T	MD710464
	1.64	V	MD710466
	1.73	X	MD710468
	1.82	Z	MD710470

Part name	Thickness mm	Identification symbol	Part No.
Spacer: F4A42, F4A51 (For adjustment of differential case preload)	0.71	71	MD754475
	0.74	74	MD727660
	0.77	77	MD754476
	0.80	80	MD727661
	0.83	83	MD720937
	0.86	86	MD720938
	0.89	89	MD720939
	0.92	92	MD720940
	0.95	95	MD720941
	0.98	98	MD720942
	1.01	01	MD720943
	1.04	04	MD720944
	1.07	07	MD720945
	1.10	J	MD710454
	1.13	D	MD700270
	1.16	K	MD710455
	1.19	L	MD710456
	1.22	G	MD700271
	1.25	M	MD710457
	1.28	N	MD710458
	1.31	E	MD706574
	1.34	O	MD710459
	1.37	P	MD710460
Spacer (For adjustment of backlash between differential side gear and pinion)	0.75 - 0.82	-	MD722986
	0.83 - 0.92	-	MD722985
	0.93 - 1.00	-	MD722984
	1.01 - 1.08	-	MD722982
	1.09 - 1.16	-	MD722983

TORQUE SPECIFICATIONS

Items		Nm
Transmission	Roll stopper bracket	70
	Wiring harness bracket	23
	Control cable bracket	23
	Eye bolt	31
	Oil cooler feed tube (to transmission case)	10
	Oil cooler feed tube (to roll stopper bracket)	11
	Oil filter <Externally mounted>	12
	Input shaft speed sensor	11
	Output shaft speed sensor	11
	Manual control lever	22
	Inhibitor switch	11
	Speedometer gear <If equipped>	5
	Sealing cap <Type without speedometer gear>	5
	Valve body cover	11
	Valve body mounting bolt	11
	Fluid temperature sensor	11
	Manual control shaft detent	6
	Rear cover	23
	Torque converter housing	48
	Oil pump <up to Mar. 2000>	23
	Oil pump <from Apr. 2000>	29
	Transfer drive gear bearing <F4A41 up to Dec. 1997, F4A42 up to Dec. 1997>	19
	Transfer drive gear bearing <F4A41 from Jan. 1998, F4A42-1 from Jan. 1998, F4A42-2 with one-way clutch, F4A51>	34
	Output shaft lock nut	170
	Output shaft bearing retainer <F4A41 up to Mar. 2000, F4A42 up to Mar. 2000>	23
	Output shaft bearing retainer <F4A41 from Apr. 2000, F4A42 from Apr. 2000>	29
	Output shaft bearing retainer <F4A51>	54

Items		Nm
Components	Transfer drive gear lock nut <F4A41 up to Dec. 1997, F4A42 up to Dec. 1997>	195
	Differential drive gear	135
	Valve body	11
	Solenoid valve support	6
	Plate	6

SEALANTS

Items	Specified sealant
Rear cover	Mitsubishi genuine sealant Part No. MD974421 or equivalent
Torque converter housing	Mitsubishi genuine sealant Part No. MD974421 or equivalent
Valve body cover	Mitsubishi genuine sealant Part No. MD974421 or equivalent

2. SPECIAL TOOLS

Tool	Number	Name	Use
	MB990607	Torque wrench socket	Removal and installation of output shaft lock nut
	MB990928	Installer adapter	Removal of transfer drive gear bearing <F4A41, F4A42>
	MB990930	Installer adapter	Installation of output shaft taper roller bearing outer race
	MB990931	Installer adapter	Installation of cap
	MB990935	Installer adapter	Installation of differential taper roller bearing outer race <F4A42>
	MB990936	Installer adapter	Installation of differential taper roller bearing outer race <F4A51> Installation of output shaft taper roller bearing <F4A41, F4A42>
	MB990937	Installer adapter	Installation of output shaft taper roller bearing <F4A51>
	MB990938	Handle	● Installation of input shaft rear bearing ● Use with installer adapter
	MB991625	Special socket (41)	Removal and installation of output shaft lock nut

Tool	Number	Name	Use
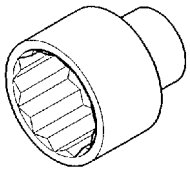	MB991626	Socket (60)	Removal and installation of transfer drive gear lock nut <F4A41, F4A42>
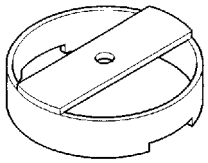	MB991628	Spring compressor	• Removal and installation of low-reverse brake snap ring <F4A41, F4A42> • Measurement of underdrive clutch and overdrive clutch end plays <F4A41, F4A42>
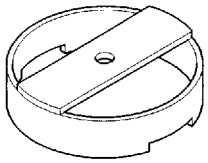	MB991629	Spring compressor	Measurement of underdrive clutch and over-drive clutch end plays <F4A51>
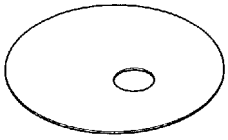	MB991631	Clearance dummy plate	Measurement of low-reverse brake and second brake end plays <F4A41, F4A42>
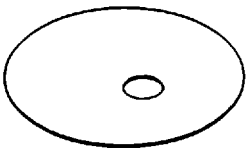	MB991632	Clearance dummy plate	Measurement of low-reverse brake and second brake end plays <F4A51>
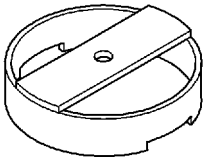	MB991789	Spring compressor	Measurement of reverse clutch end play <F4A51>
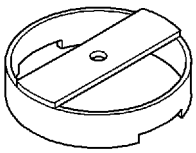	MB991790	Spring compressor	Measurement of reverse clutch end play <F4A41, F4A42>
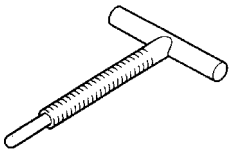	MD998333	Oil pump remover	Removal of oil pump
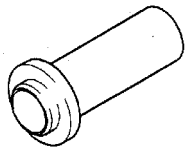	MD998334	Oil seal installer	Installation of oil pump oil seal

Tool	Number	Name	Use
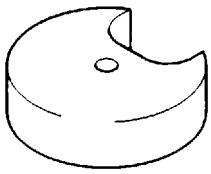	MD998338	Spring comopressor	Removal and installation of low-reverse brake snap ring <F4A51>
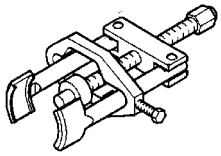	MD998348	Bearing and gear puller	Removal of transfer drive gear bearing
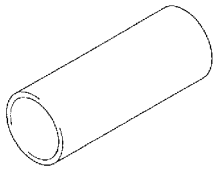	MD998350	Bearing installer	Installation of output shaft, collar, bearing
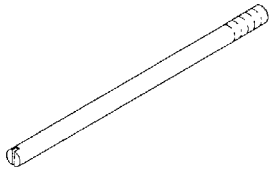	MD998412	Guide	Installation of oil pump and transfer drive gear
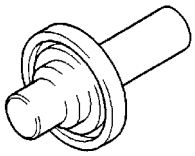	MD998800	Oil seal installer	Installation of drive shaft oil seal
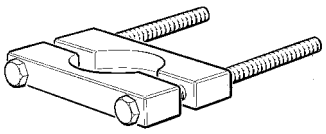	MD998801	Bearing remover	Removal of each bearing
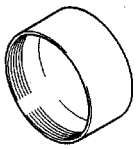	MD998812	Installer cap	Use with installer and installer adapter.
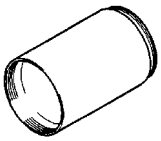	MD998813	Installer - 100	Use with installer cap and installer adapter.
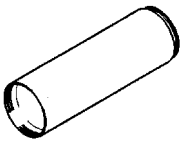	MD998814	Installer - 200	Use with installer cap and installer adapter.

Tool	Number	Name	Use
	MD998819	Installer adapter (40)	Installation of differential ball bearing <F4A41>
	MD998820	Installer adapter (42)	Installation of differential taper roller bearing <F4A42>
	MD998823	Installer adapter (48)	Installation of output shaft taper roller bearing <F4A41, F4A42>, transfer drive gear <F4A41, F4A42>
	MD998824	Installer adapter (50)	Installation of transfer drive gear <F4A51>, differential taper roller bearing <F4A51>
	MD998827	Installer adapter (56)	Installation of output shaft taper roller bearing <F4A51>
	MD998829	Installer adapter (60)	Installation of transfer drive gear bearing <F4A41, F4A42>
	MD998903	Spring compressor	Removal and installation of one-way clutch inner race snap ring <F4A42>
	MD998907	Spring compressor	Removal and installation of underdrive clutch snap ring
	MD998913	Dial gauge extension	Measurement of low-reverse brake and second brake end plays

Tool	Number	Name	Use
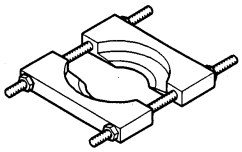	MD998917	Bearing remover	Removal of output shaft taper roller bearing (except F4A51)
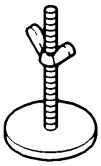	MD998924	Spring compressor retainer	• Removal and installation of low-reverse brake snap ring • Measurement of underdrive clutch and overdrive clutch end plays
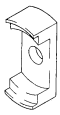	MD999590	Spring compressor	Removal and installation of overdrive clutch snap ring

3. TRANSMISSION

DISASSEMBLY AND REASSEMBLY <F4A41 up to Dec. 1997, F4A42-1 up to Dec. 1997 and F4A42-2 without one-way clutch>

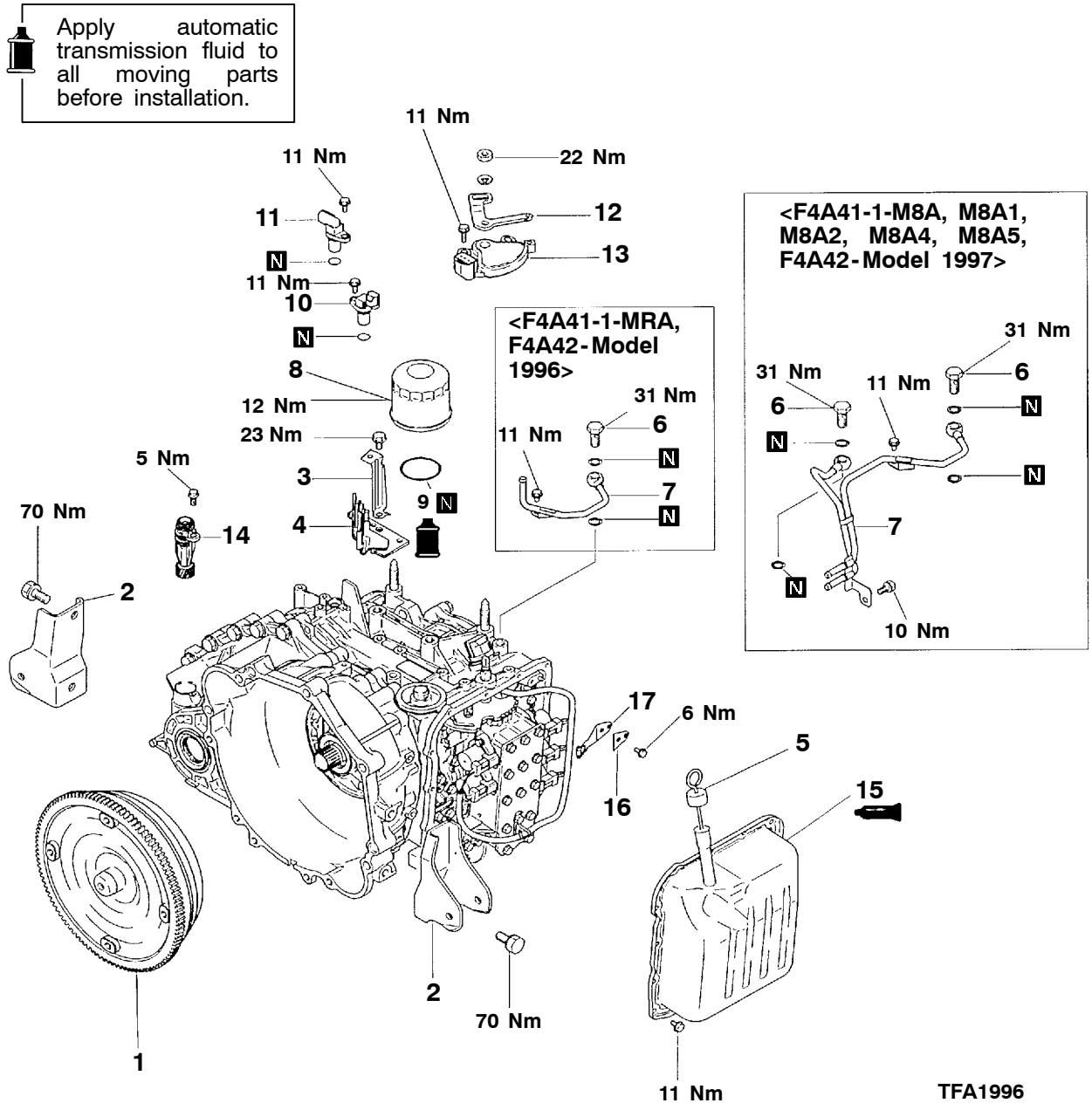

1. Torque converter
2. Roll stopper bracket
3. Harness bracket
4. Control cable support bracket
5. Oil level gauge
6. Eye bolt
7. Oil cooler feed tube
8. Oil filter
9. Oil filter gasket
10. Input shaft speed sensor
11. Output shaft speed sensor
12. Manual control lever
13. Inhibitor switch
14. Speedometer gear
15. Valve body cover
16. Manual control shaft detent spring <Model 1996 only>
17. Manual control shaft detent

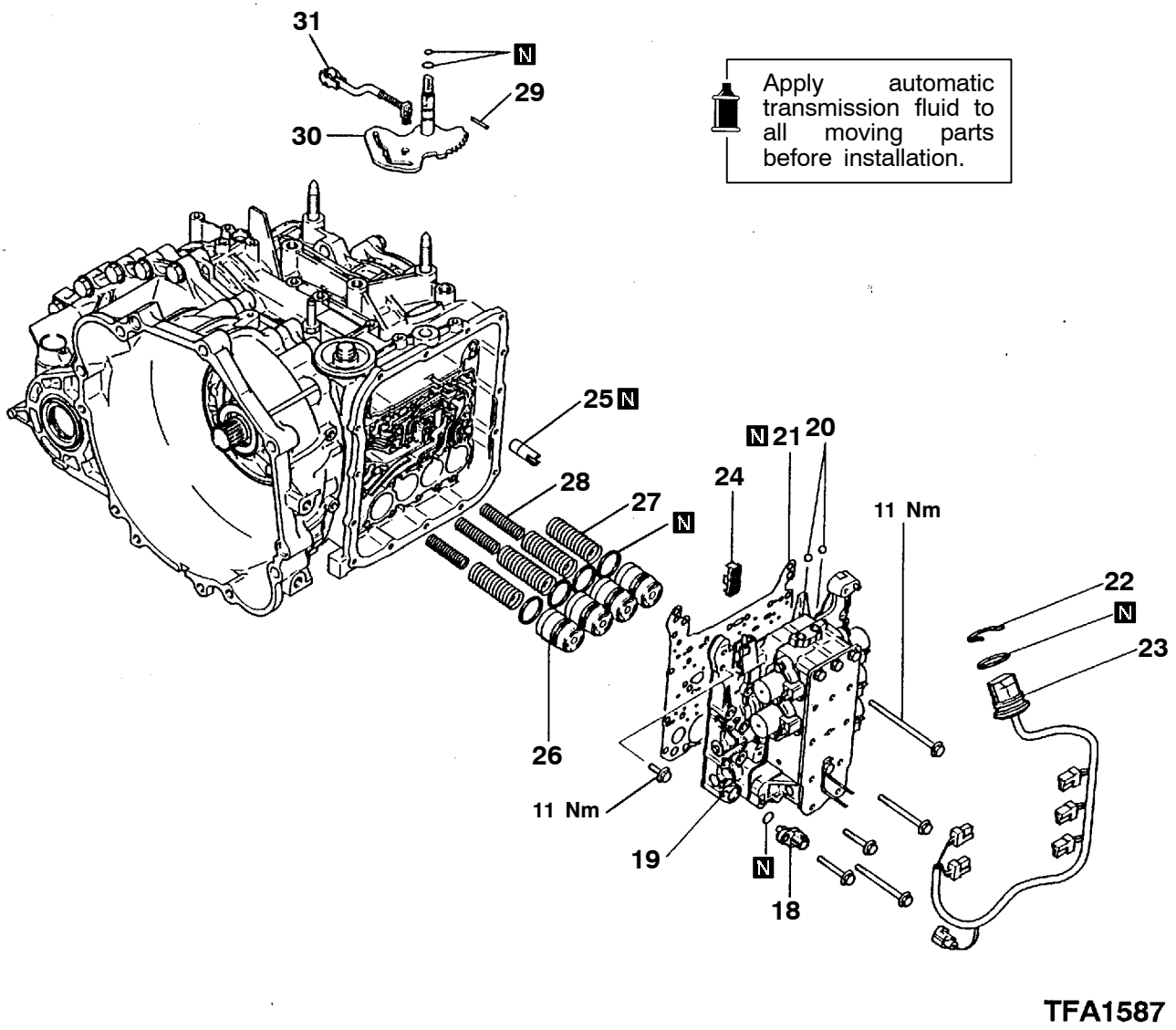

18. Fluid temperature sensor
19. Valve body
20. Steel ball
21. Gasket
22. Snap ring
23. Solenoid valve harness
24. Strainer
25. Second brake retainer oil seal
26. Accumulator piston
27. Accumulator spring
28. Accumulator spring
29. Manual control lever shaft roller
30. Manual control lever shaft
31. Parking pawl rod

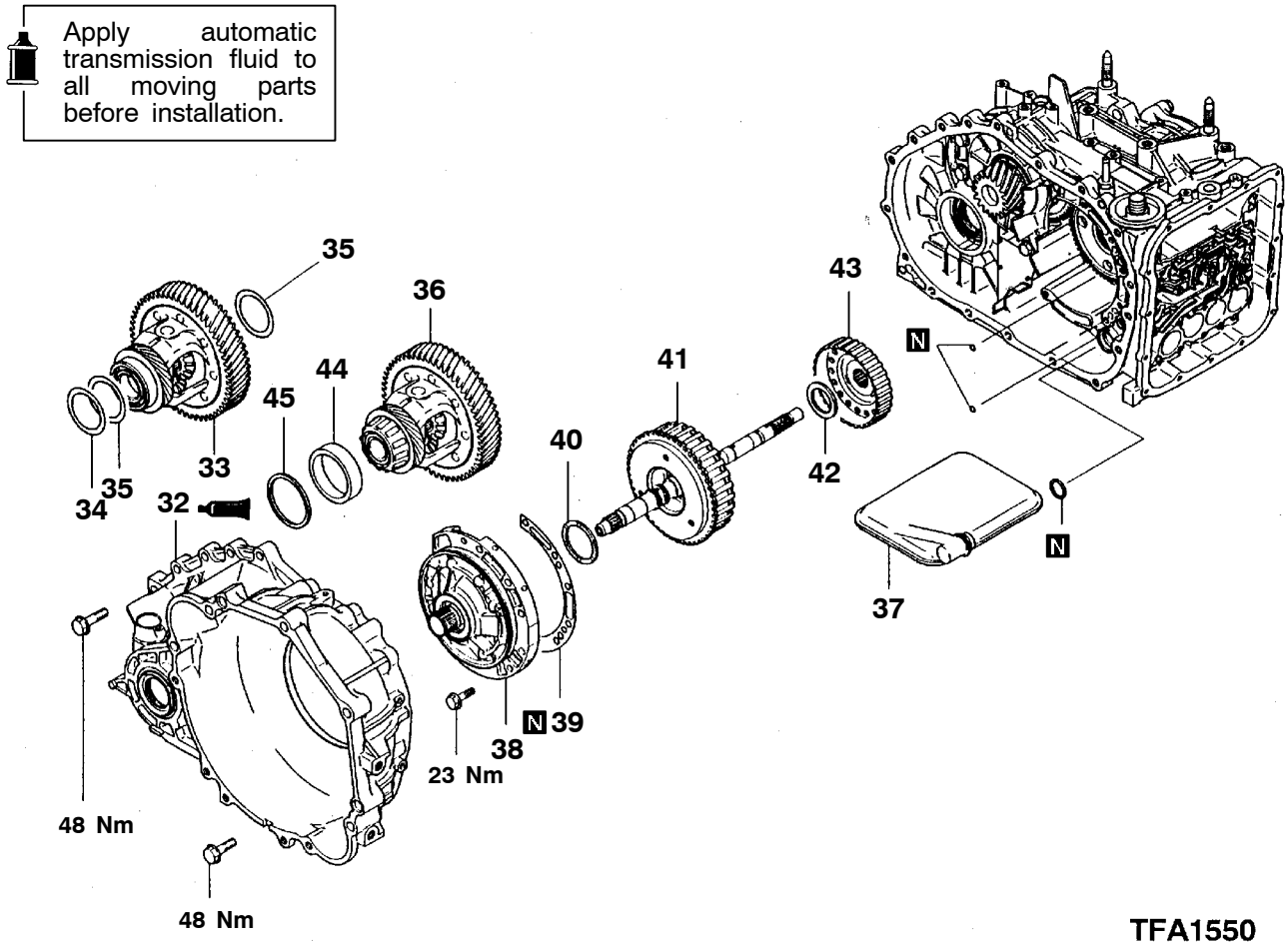

32. Torque converter housing
33. Differential <F4A41>
34. Spacer <F4A41>
35. Spacer <F4A41-1-MRA only>
36. Differential <F4A42>
37. Oil filter
38. Oil pump
39. Gasket
40. Thrust washer #1
41. Underdrive clutch and input shaft
42. Thrust bearing #2
43. Underdrive clutch hub
44. Outer race <F4A42>
45. Spacer <F4A42>

No. of Brake Discs and Plates

Brake	Model	Brake Disc	Brake Plate
Low-reverse brake	F4A41	4	3
	F4A42-1	5	4
	F4A42-2	6	5
Second brake	F4A41	2	1
	F4A42-1 F4A42-2	3	2

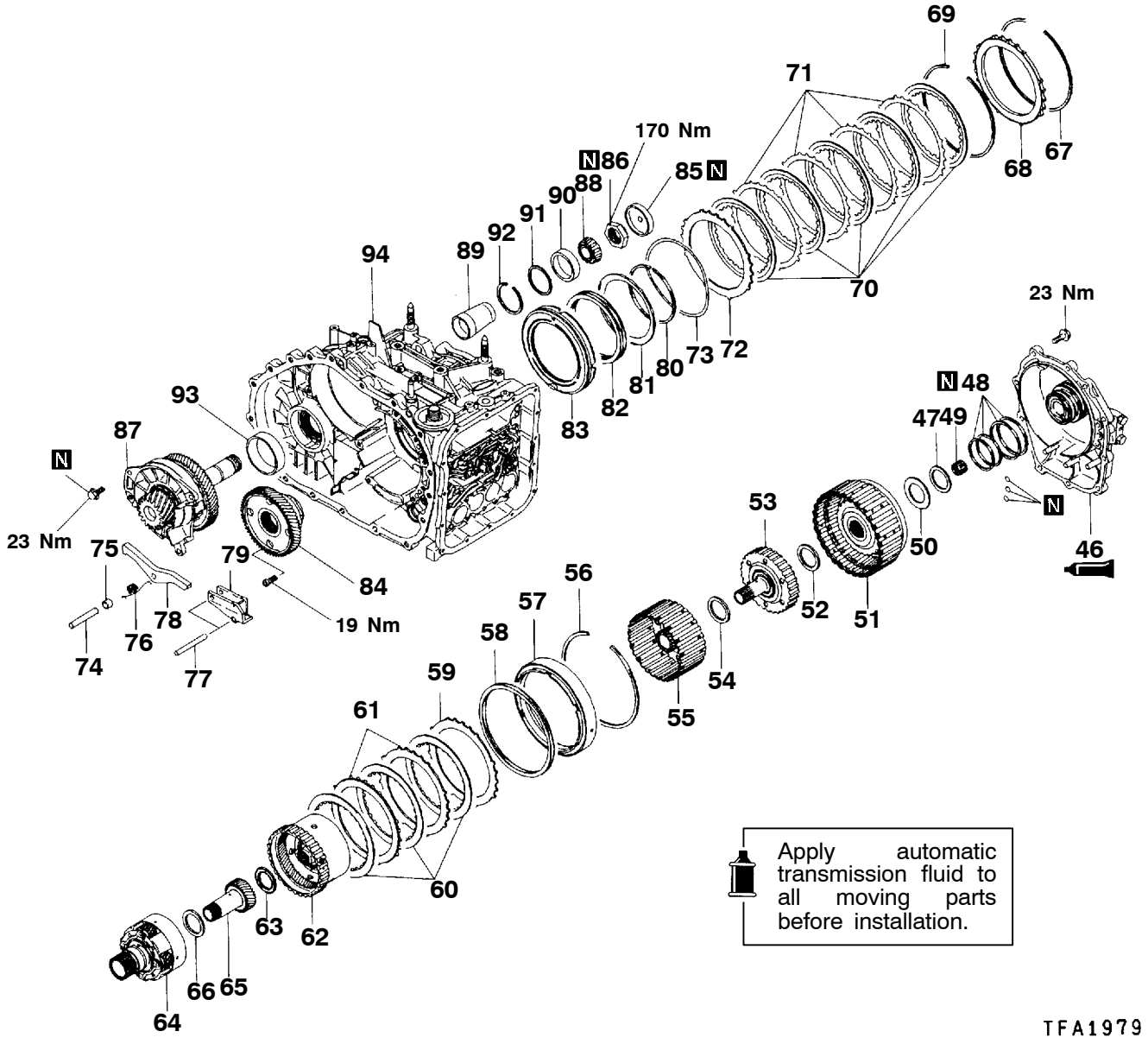

46. Rear cover
47. Thrust race #8
48. Seal ring
49. Input shaft rear bearing
50. Thrust bearing #7
51. Reverse and overdrive clutch
52. Thrust bearing #6
53. Overdrive clutch hub
54. Thrust bearing #5
55. Planetary reverse sun gear
56. Snap ring
57. Second brake piston
58. Return spring
59. Pressure plate
60. Second brake disc
61. Second brake plate
62. Overdrive planetary carrier
63. Thrust bearing #4
64. Output planetary carrier
65. Underdrive sun gear
66. Thrust bearing #3
67. Snap ring
68. Reaction plate
69. Snap ring
70. Low-reverse brake disc
71. Low-reverse brake plate
72. Pressure plate
73. Wave spring
74. Parking pawl shaft
75. Spacer
76. Parking pawl spring
77. Parking roller support shaft
78. Parking pawl
79. Parking roller support
80. Snap ring
81. Spring retainer
82. Return spring
83. Low-reverse brake piston
84. Transfer drive gear
85. Cap
86. Lock nut
87. Output shaft
88. Taper roller bearing
89. Collar
90. Outer race
91. Spacer
92. Snap ring
93. Outer race
94. Transmission case

DISASSEMBLY AND REASSEMBLY <F4A41 from Jan. 1998 and F4A42-1 from Jan. 1998>

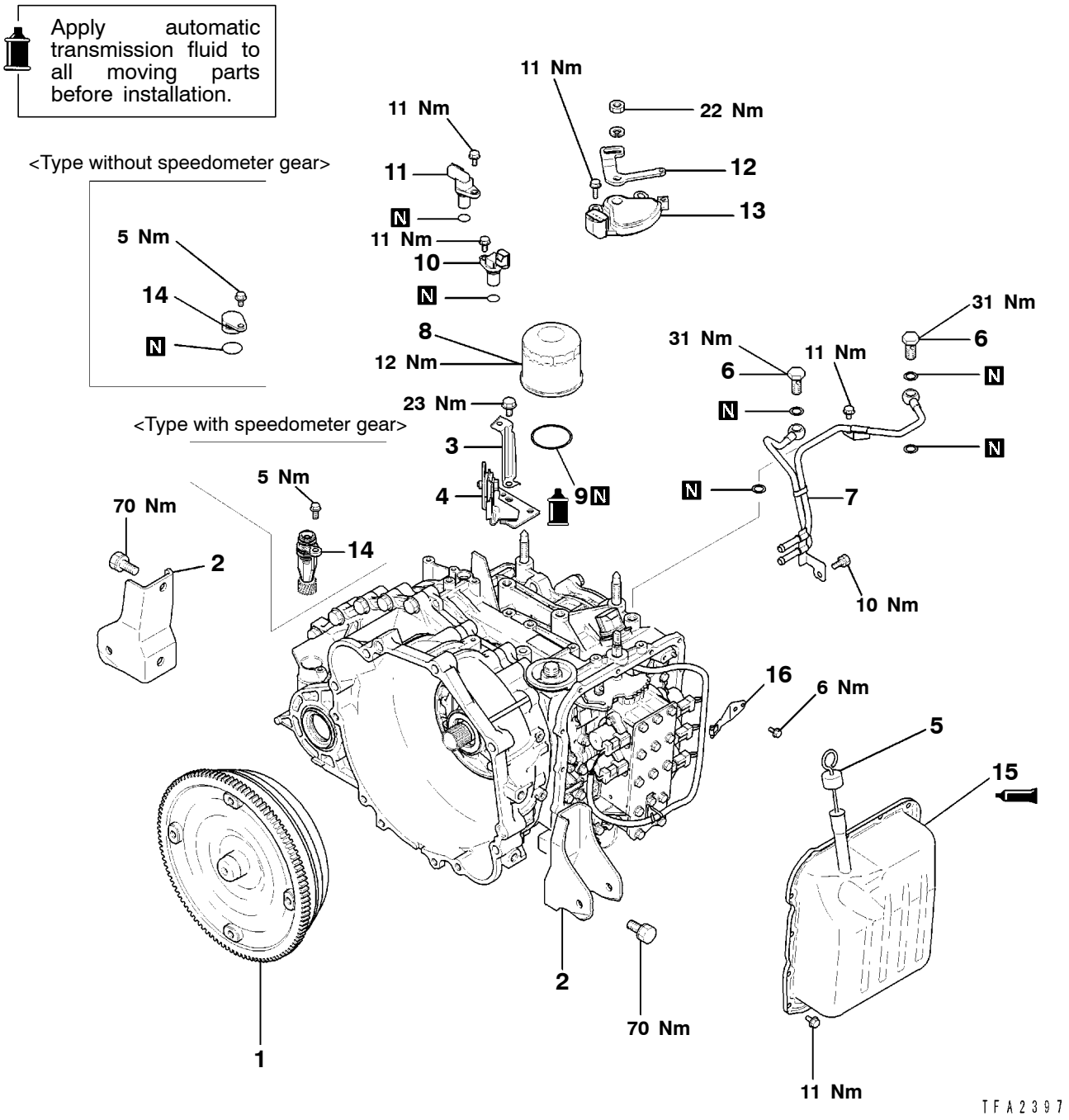

1. Torque converter
2. Roll stopper bracket
3. Harness bracket
4. Control cable support bracket
5. Oil level gauge
6. Eye bolt
7. Oil cooler feed tube
8. Oil filter <Externally mounted type>
9. Oil filter gasket <Externally mounted type>
10. Input shaft speed sensor
11. Output shaft speed sensor
12. Manual control lever
13. Inhibitor switch
14. Speedometer gear <If equipped> Sealing cap <Type without speedometer gear>
15. Valve body cover
16. Manual control shaft detent

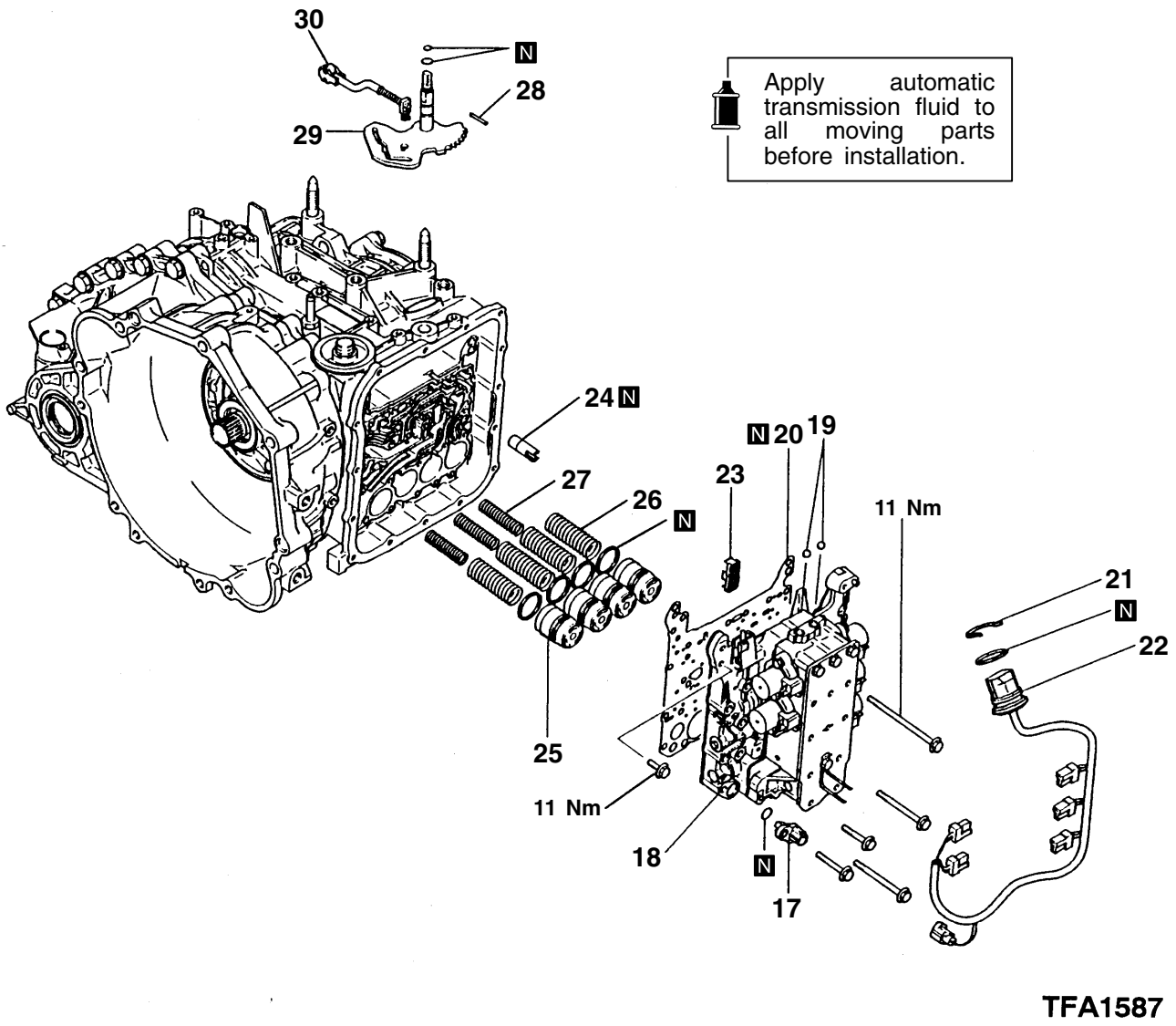

17. Fluid temperature sensor*
18. Valve body
19. Steel ball
20. Gasket
21. Snap ring
22. Solenoid valve harness
23. Strainer
24. Second brake retainer oil seal
25. Accumulator piston
26. Accumulator spring
27. Accumulator spring
28. Manual control lever shaft roller
29. Manual control lever shaft
30. Parking pawl rod

*: Not applicable to type with solenoid valve harness incorporating fluid temperature sensor

Apply automatic transmission fluid to all moving parts before installation.

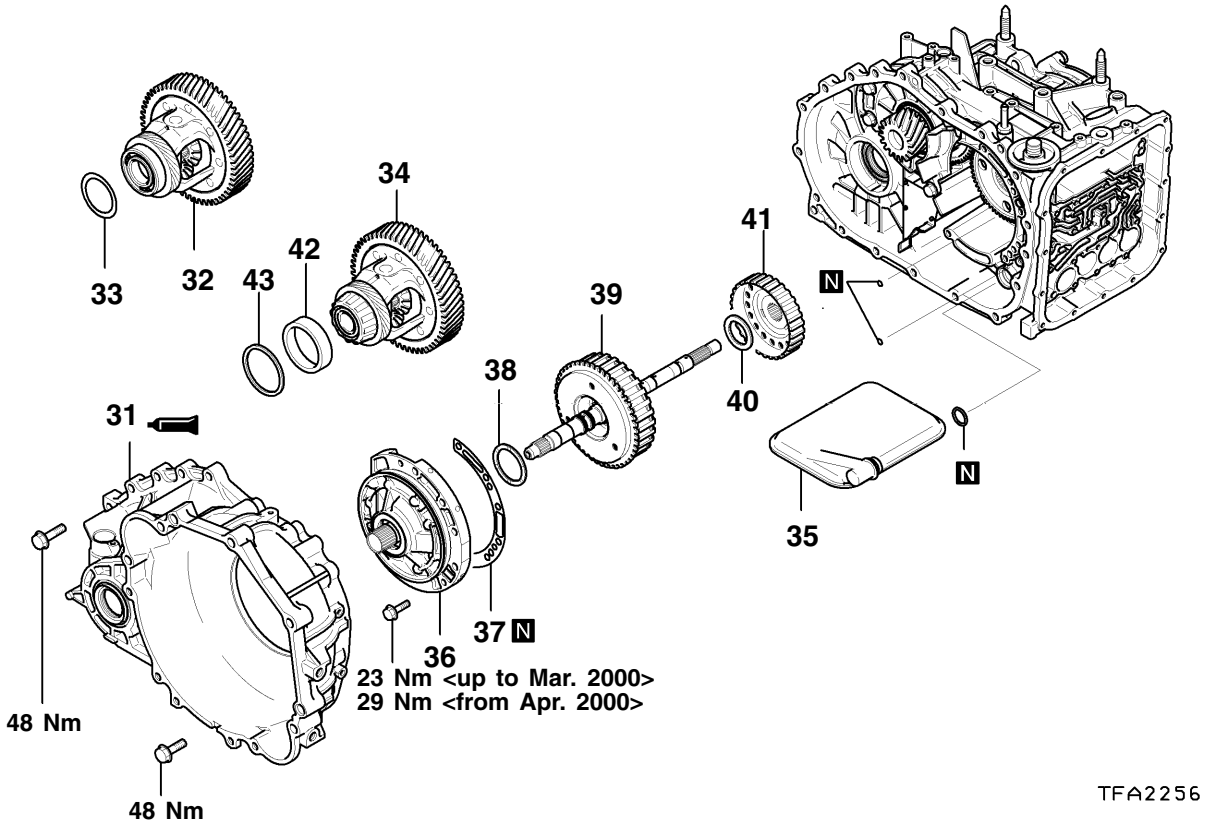

31. Torque converter housing
32. Differential <F4A41>
33. Spacer <F4A41>
34. Differential <F4A42-1>
35. Oil filter
36. Oil pump
37. Gasket
38. Thrust washer #1
39. Underdrive clutch and input shaft
40. Thrust bearing #2
41. Underdrive clutch hub
42. Outer race <F4A42-1>
43. Spacer <F4A42-1>

No. of Brake Discs and Plates

Brake	Model	Brake Disc	Brake Plate
Low-reverse brake	F4A41	4	3
	F4A42-1	5	4
Second brake	F4A41	2	1
	F4A42-1	3	2

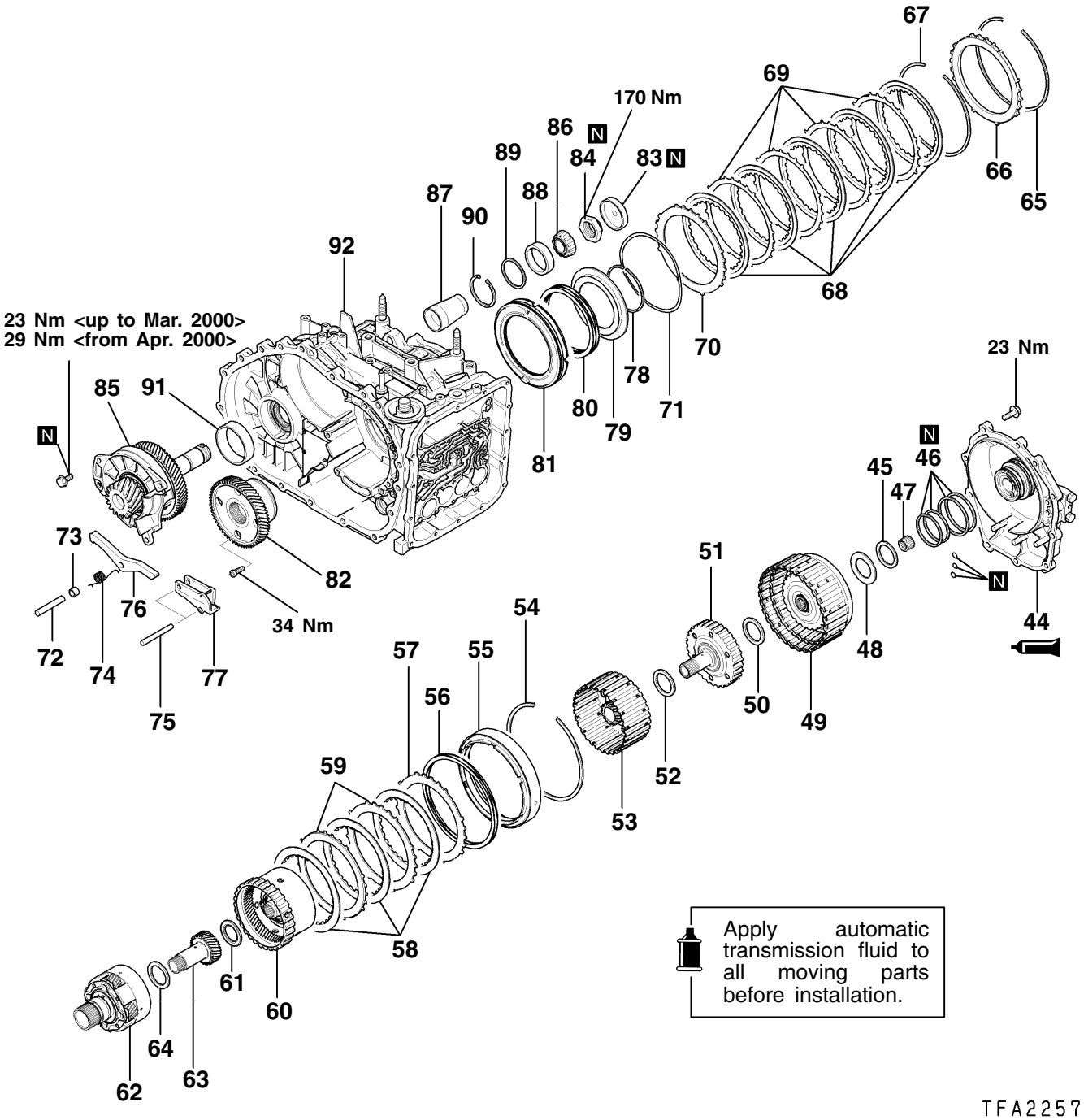

44. Rear cover
45. Thrust race #8
46. Seal ring
47. Input shaft rear bearing
48. Thrust bearing #7
49. Reverse and overdrive clutch
50. Thrust bearing #6
51. Overdrive clutch hub
52. Thrust bearing #5
53. Planetary reverse sun gear
54. Snap ring
55. Second brake piston
56. Return spring
57. Pressure plate
58. Second brake disc
59. Second brake plate
60. Overdrive planetary carrier
61. Thrust bearing #4
62. Output planetary carrier
63. Underdrive sun gear
64. Thrust bearing #3
65. Snap ring
66. Reaction plate
67. Snap ring
68. Low-reverse brake disc
69. Low-reverse brake plate
70. Pressure plate
71. Wave spring
72. Parking pawl shaft
73. Spacer
74. Parking pawl spring
75. Parking roller support shaft
76. Parking pawl
77. Parking roller support
78. Snap ring
79. Spring retainer
80. Return spring
81. Low-reverse brake piston
82. Transfer drive gear
83. Cap
84. Lock nut
85. Output shaft
86. Taper roller bearing
87. Collar
88. Outer race
89. Spacer
90. Snap ring
91. Outer race
92. Transmission case

DISASSEMBLY AND REASSEMBLY <F4A42-2 with one-way clutch>

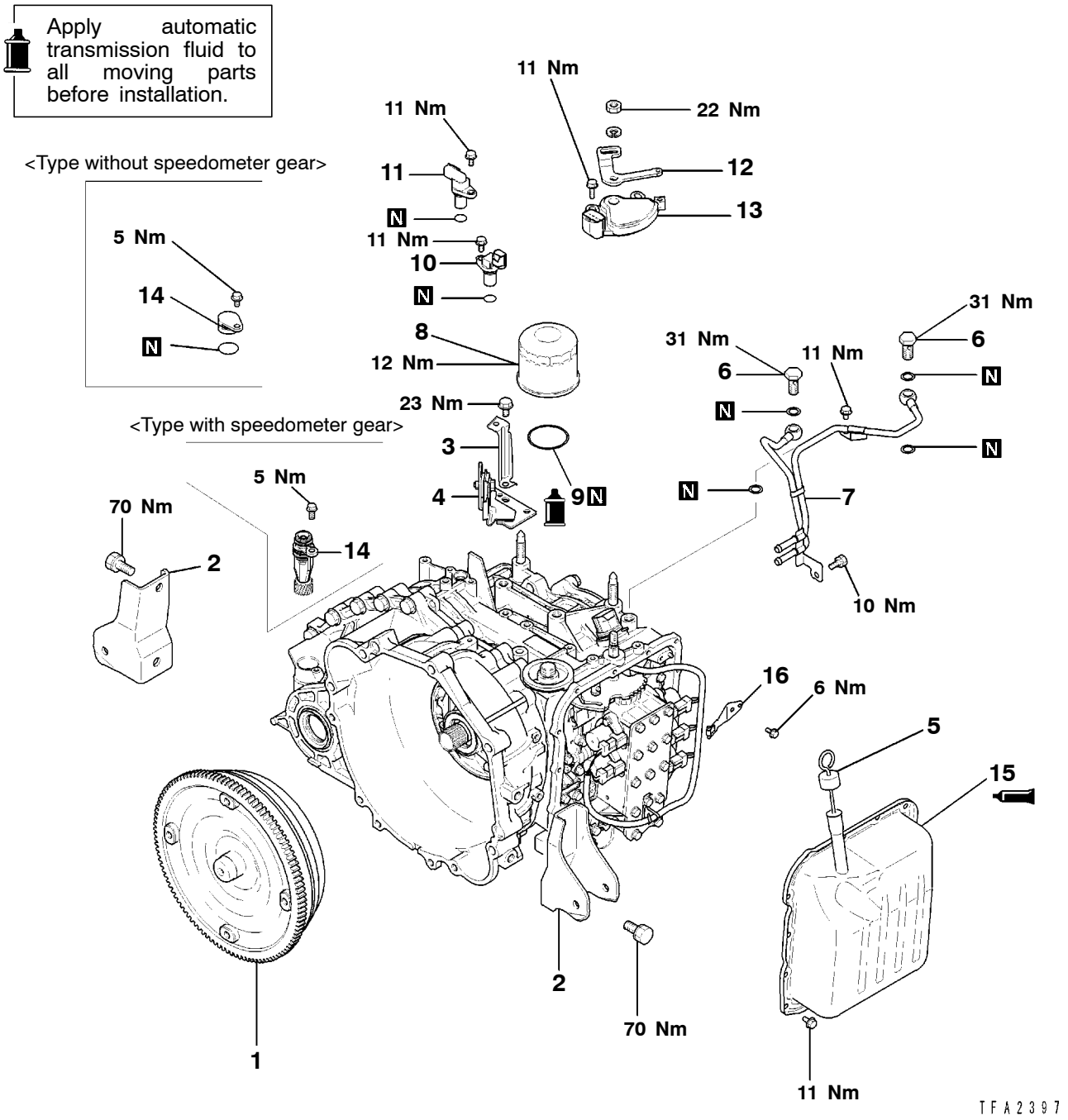

1. Torque converter
2. Roll stopper bracket
3. Harness bracket
4. Control cable support bracket
5. Oil level gauge
6. Eye bolt
7. Oil cooler feed tube
8. Oil filter <Externally mounted type>
9. Oil filter gasket <Externally mounted type>
10. Input shaft speed sensor
11. Output shaft speed sensor
12. Manual control lever
13. Inhibitor switch
14. Speedometer gear <If equipped> Sealing cap <Type without speedometer gear>
15. Valve body cover
16. Manual control shaft detent

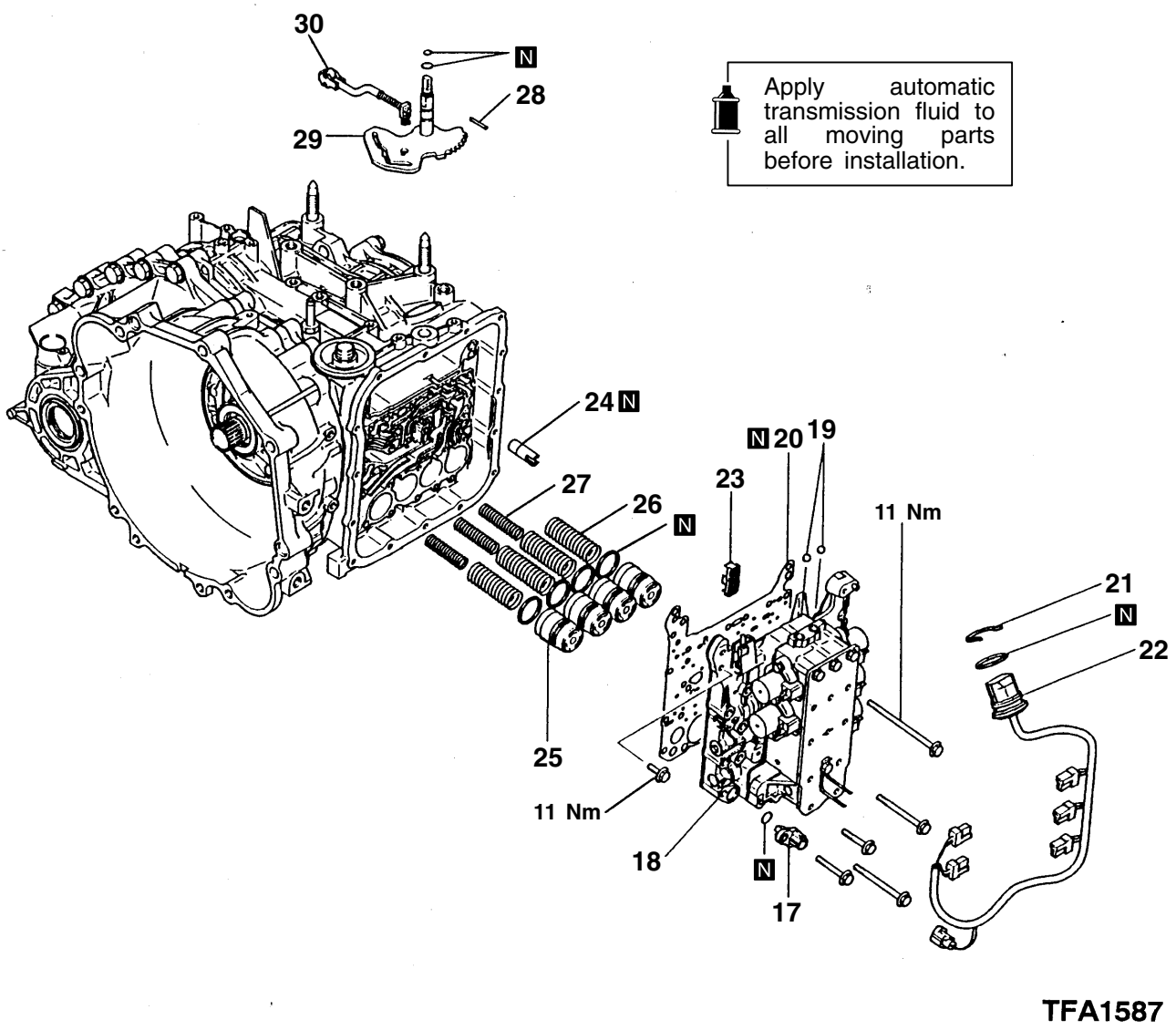

17. Fluid temperature sensor*
18. Valve body
19. Steel ball
20. Gasket
21. Snap ring
22. Solenoid valve harness
23. Strainer
24. Second brake retainer oil seal
25. Accumulator piston
26. Accumulator spring
27. Accumulator spring
28. Manual control lever shaft roller
29. Manual control lever shaft
30. Parking pawl rod

*: Not applicable to type with solenoid valve harness incorporating fluid temperature sensor

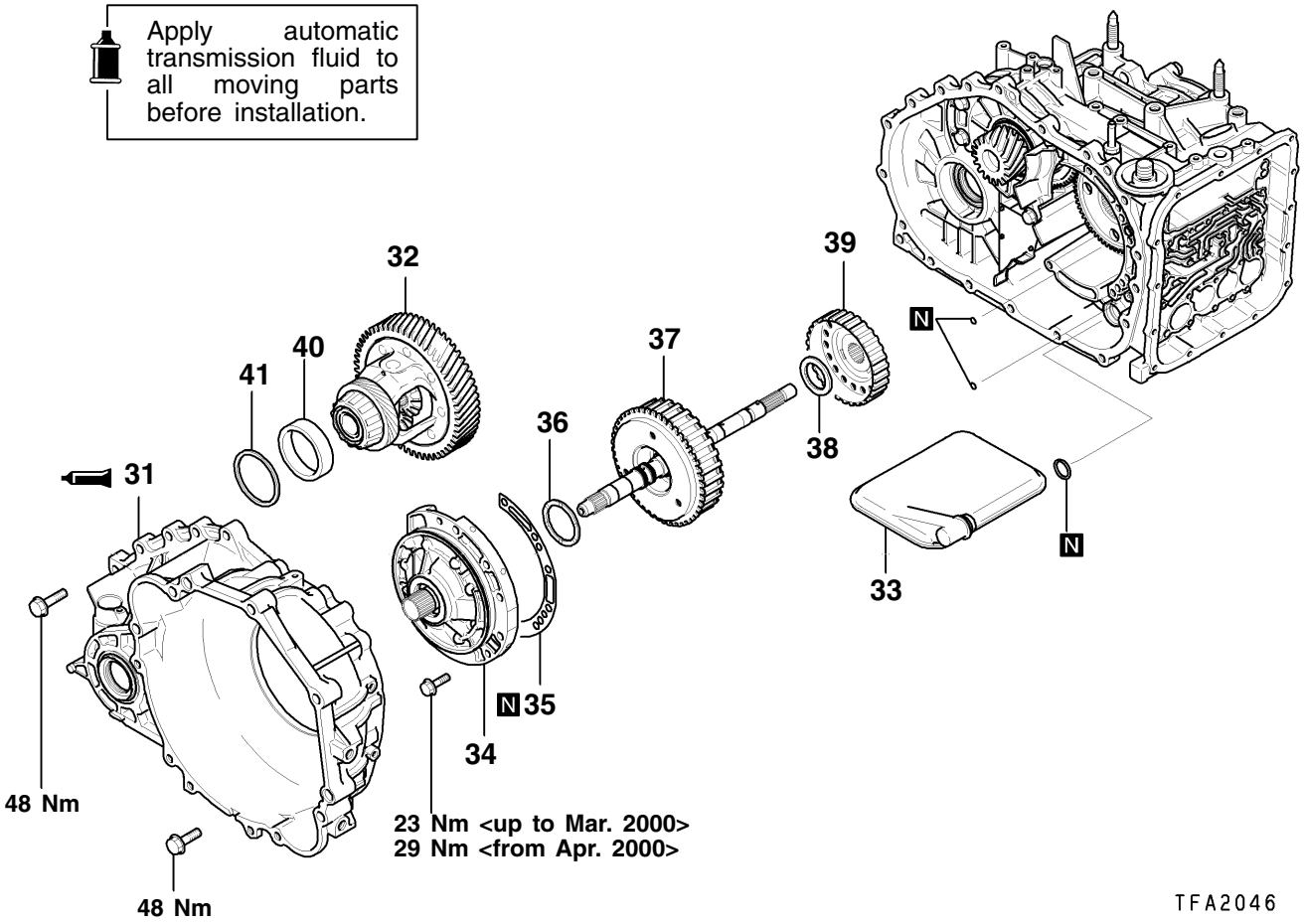

31. Torque converter housing
32. Differential
33. Oil filter
34. Oil pump
35. Gasket
36. Thrust washer #1
37. Underdrive clutch and input shaft
38. Thrust bearing #2
39. Underdrive clutch hub
40. Outer race
41. Spacer

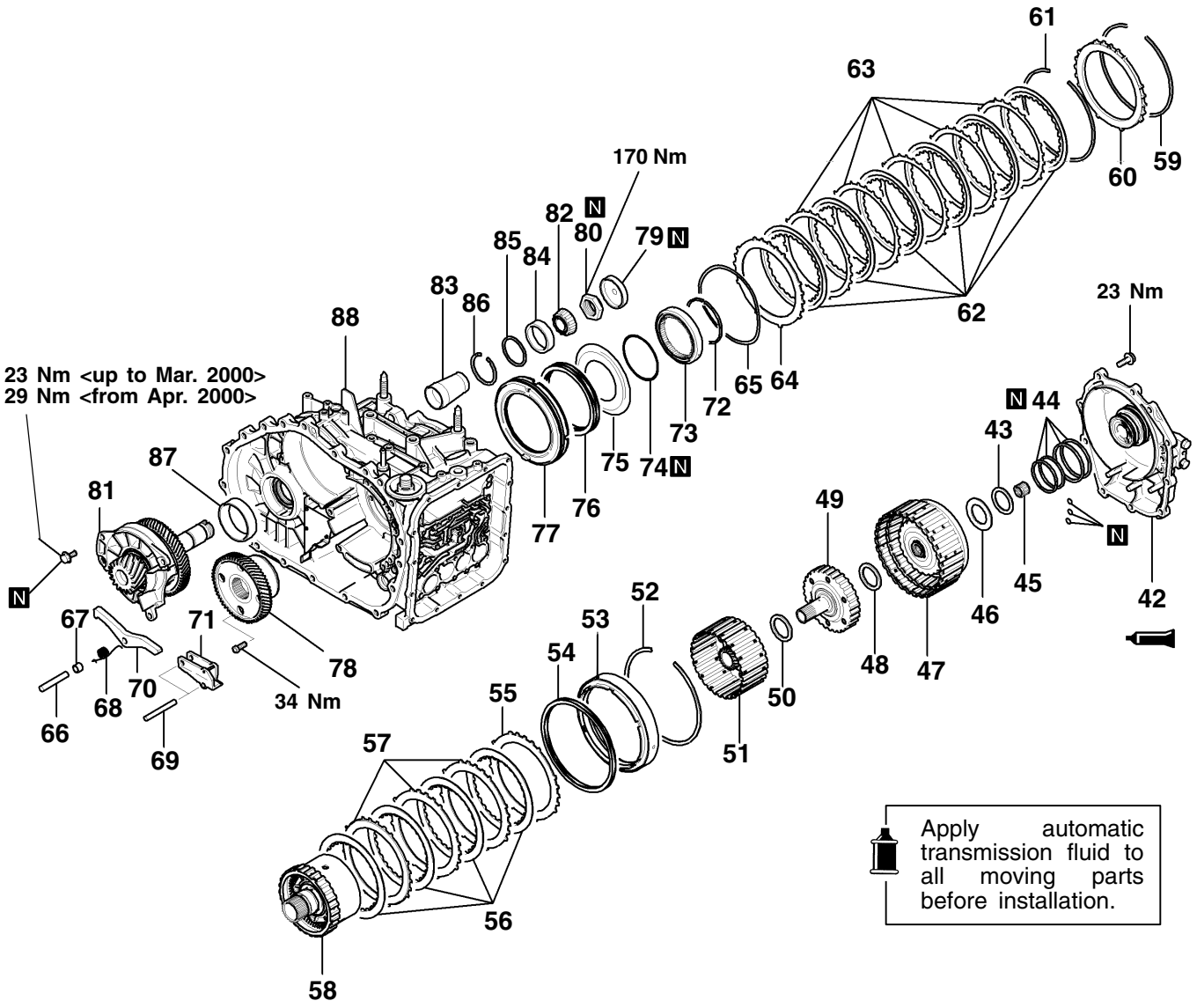

42. Rear cover
43. Thrust race #8
44. Seal ring
45. Input shaft rear bearing
46. Thrust bearing #7
47. Reverse and overdrive clutch
48. Thrust bearing #6
49. Overdrive clutch hub
50. Thrust bearing #5
51. Planetary reverse sun gear
52. Snap ring
53. Second brake piston
54. Return spring
55. Pressure plate
56. Second brake disc
57. Second brake plate
58. Planetary carrier assembly
59. Snap ring
60. Reaction plate
61. Snap ring
62. Low-reverse brake disc
63. Low-reverse brake plate
64. Pressure plate
65. Wave spring
66. Parking pawl shaft
67. Spacer
68. Parking pawl spring
69. Parking roller support shaft
70. Parking pawl
71. Parking roller support
72. Snap ring
73. One-way clutch inner race
74. O-ring
75. Spring retainer
76. Return spring
77. Low-reverse brake piston
78. Transfer drive gear
79. Cap
80. Lock nut
81. Output shaft
82. Taper roller bearing
83. Collar
84. Outer race
85. Spacer
86. Snap ring
87. Outer race
88. Transmission case

DISASSEMBLY AND REASSEMBLY <F4A51>

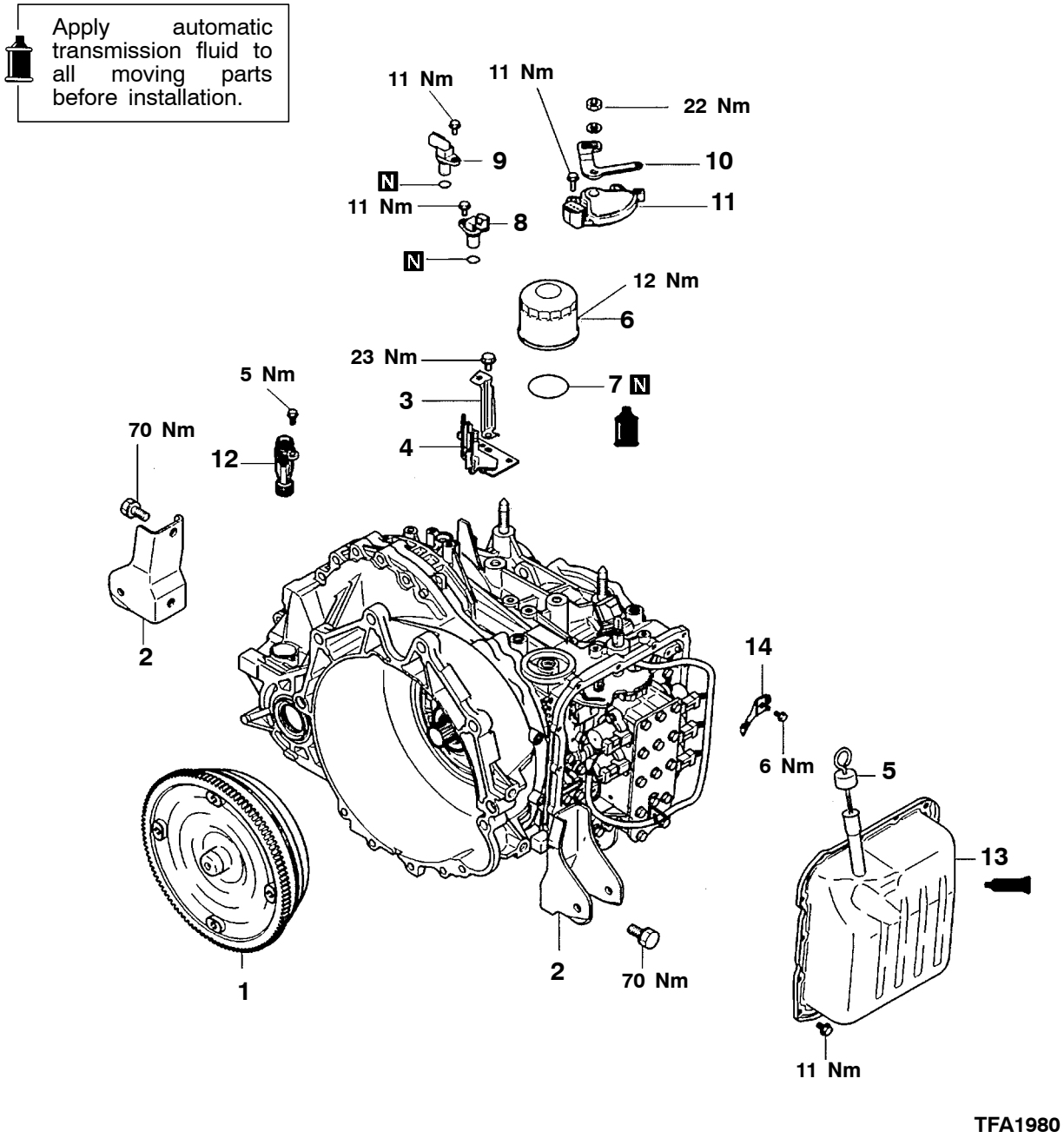

1. Torque converter
2. Roll stopper bracket
3. Harness bracket
4. Control cable support bracket
5. Oil level gauge
6. Oil filter <Externally mounted type>
7. Oil filter gasket <Externally mounted type>
8. Input shaft speed sensor
9. Output shaft speed sensor
10. Manual control lever
11. Inhibitor switch
12. Speedometer gear
13. Valve body cover
14. Manual control shaft detent

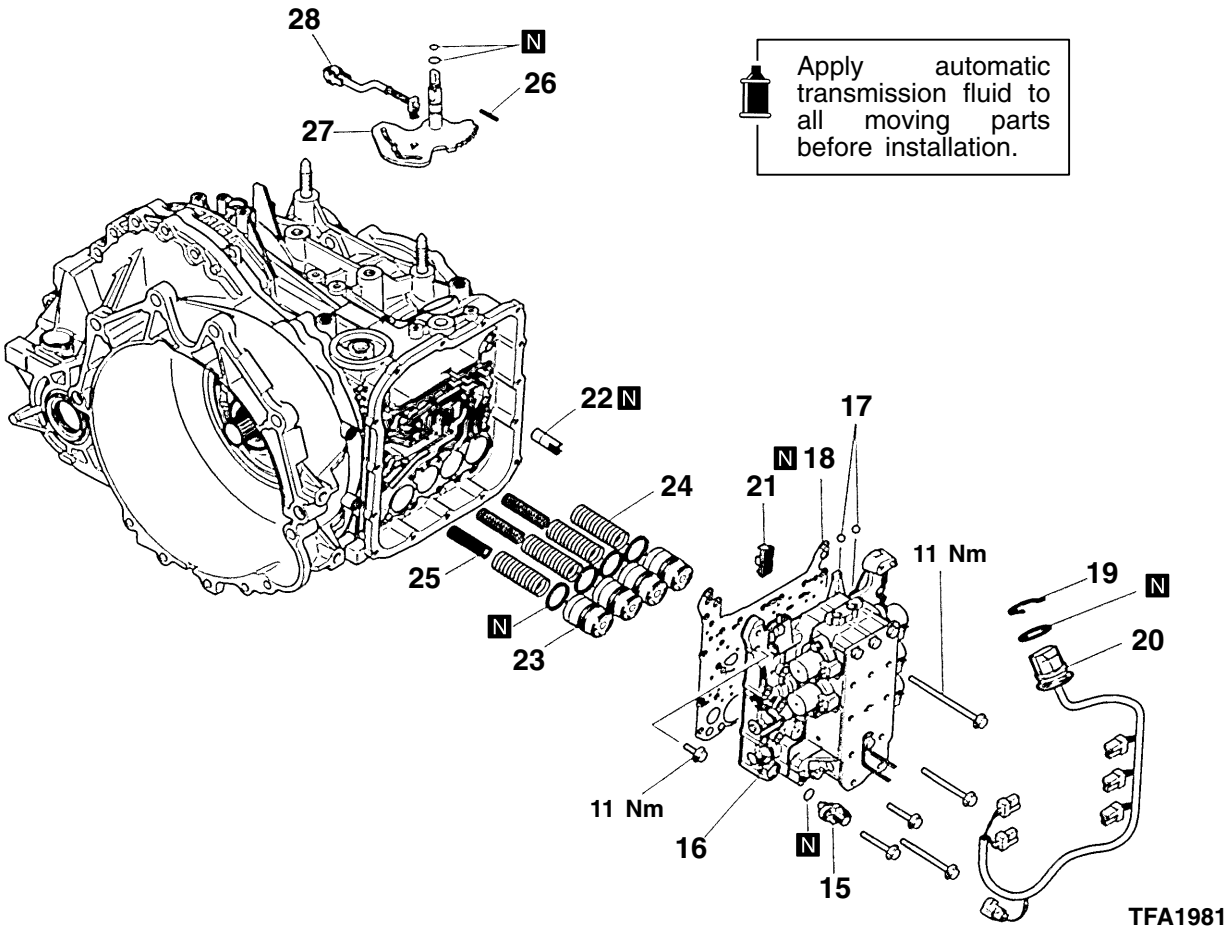

15. Fluid temperature sensor*
16. Valve body
17. Steel ball
18. Gasket
19. Snap ring
20. Solenoid valve harness
21. Strainer
22. Second brake retainer oil seal
23. Accumulator piston
24. Accumulator spring
25. Accumulator spring
26. Manual control lever shaft roller
27. Manual control lever shaft
28. Parking pawl rod

*: Not applicable to type with solenoid valve harness incorporating fluid temperature sensor

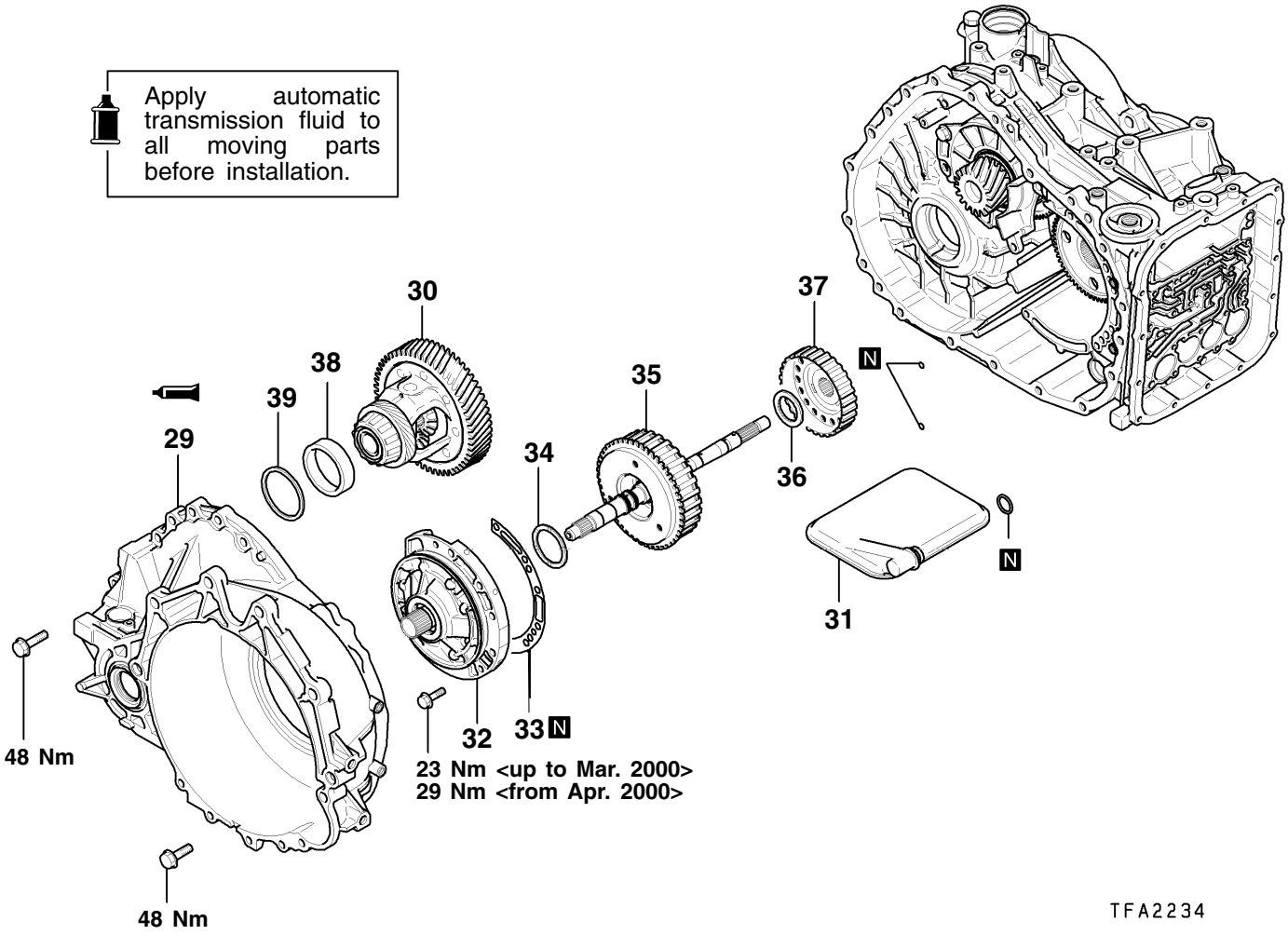

29. Torque converter housing
30. Differential
31. Oil filter
32. Oil pump
33. Gasket
34. Thrust washer #1
35. Underdrive clutch and input shaft
36. Thrust bearing #2
37. Underdrive clutch hub
38. Outer race
39. Spacer

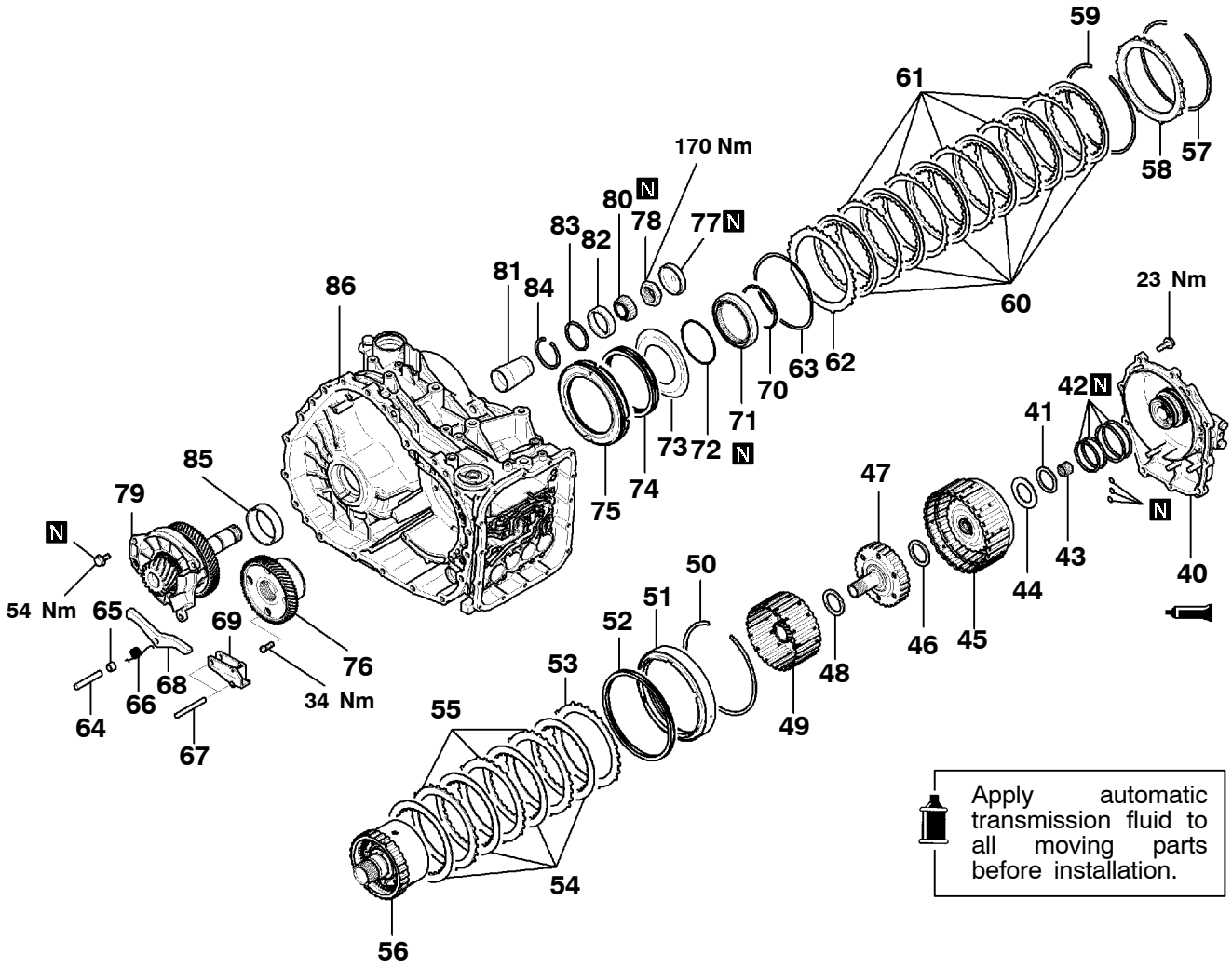

40. Rear cover
41. Thrust race #8
42. Seal ring
43. Input shaft rear bearing
44. Thrust bearing #7
45. Rear and overdrive clutch
46. Thrust bearing #6
47. Overdrive clutch hub
48. Thrust bearing #5
49. Planetary reverse sun gear
50. Snap ring
51. Second brake piston
52. Return spring
53. Pressure plate
54. Second brake disc
55. Second brake plate
56. Planetary carrier assembly
57. Snap ring
58. Reaction plate
59. Snap ring
60. Low-reverse brake disc
61. Low-reverse brake plate
62. Pressure plate
63. Wave spring
64. Parking pawl shaft
65. Spacer
66. Parking pawl spring
67. Parking roller support shaft
68. Parking pawl
69. Parking roller support
70. Snap ring
71. One-way clutch inner race
72. O-ring
73. Spring retainer
74. Return spring
75. Low-reverse brake piston
76. Transfer drive gear
77. Cap
78. Lock nut
79. Output shaft
80. Taper roller bearing
81. Collar
82. Outer race
83. Spacer
84. Snap ring
85. Outer race
86. Transmission case

Intentionally blank

DISASSEMBLY

Caution

1. **Because the automatic transmission is manufactured from high-precision parts, sufficient care must be taken not to scratch or damage these parts during disassembly and reassembly.**
2. **The working area should be covered with a rubber mat to keep it clean at all times.**
3. **Do not wear any cloth gloves and do not use any rags during disassembly. Use nylon cloth or paper towels if you need to use something.**
4. **Parts which have been disassembled should all be cleaned. Metal parts can be cleaned with normal detergent, but they should be dried completely using compressed air.**
5. **Clutch discs, plastic thrust plates and rubber parts should be cleaned with automatic transmission fluid (ATF) so that they do not become dirty.**
6. **If the transmission body has been damaged, disassemble and clean the cooler system also.**

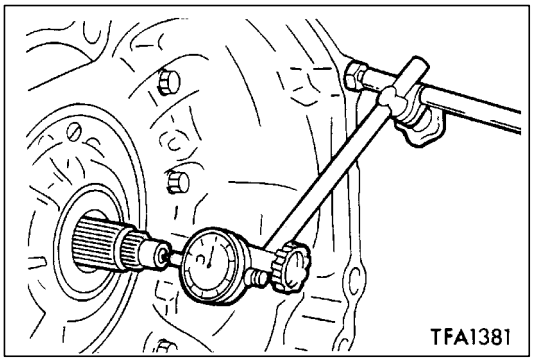

(1) Remove the torque converter.
(2) Use the dial gauge to measure the input shaft end play.
(3) Remove each bracket.
(4) Remove the oil level gauge.
(5) Remove the eye bolt, gasket and the oil cooler feed tube.
(6) Remove the oil filter. <Externally mounted type>

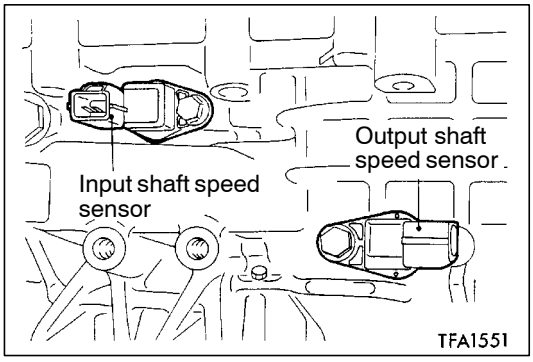

(7) Remove the input shaft speed sensor and output shaft speed sensor.

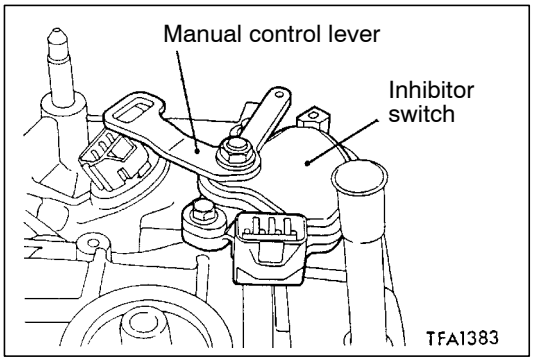

(8) Remove the manual control lever, and then remove the inhibitor switch.

Caution
Make sure that the valve body is installed before removing the manual control lever installation nut.

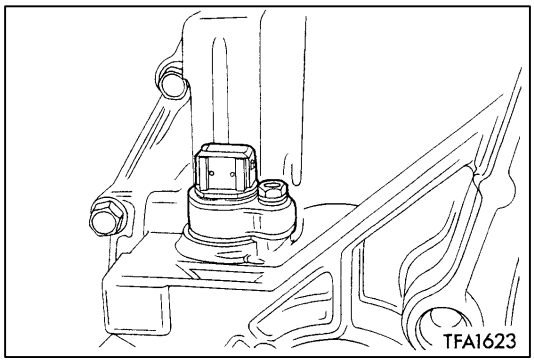

(9) Remove the speedometer gear or sealing cap.

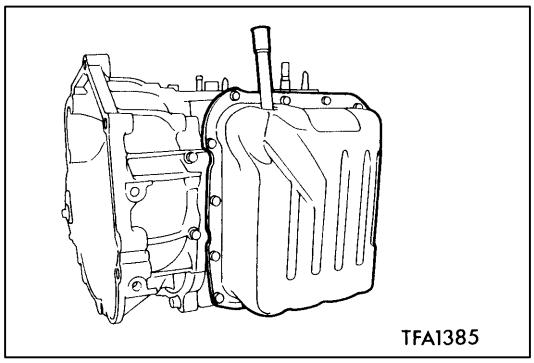

(10) Remove the valve body cover.

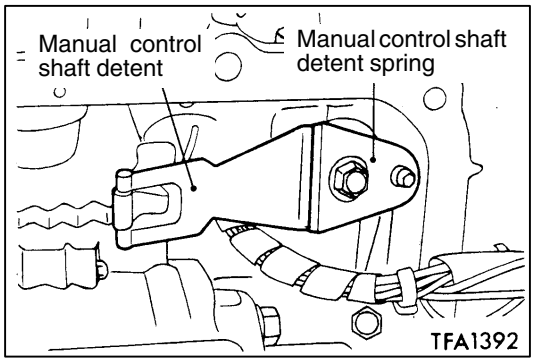

(11) Remove the manual control shaft detent spring and the manual control shaft detent. <Model 1996>

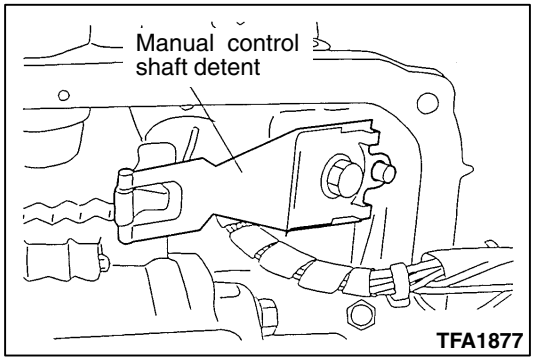

Remove the manual control shaft detent. <from Model 1997>

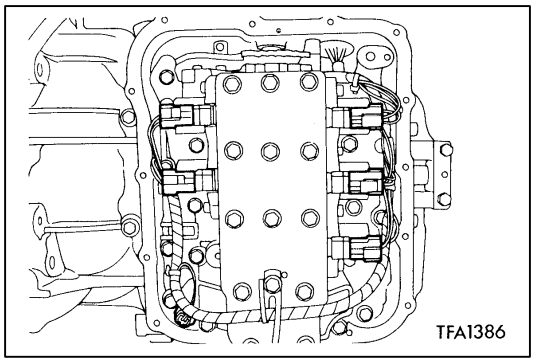

(12) Disconnect the solenoid valve harness from the valve body by undoing the fluid temperature sensor (only in the harness that incorporates the sensor) and all the connectors.

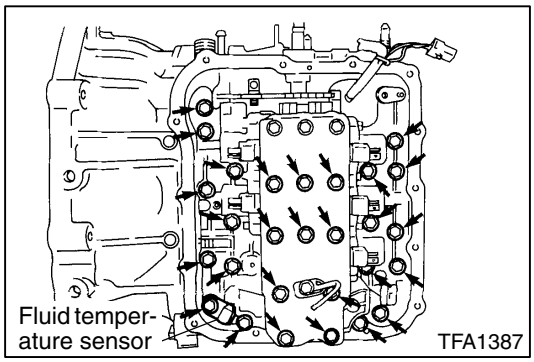

(13) Remove the valve body mounting bolts (28 pieces).
(14) Remove the fluid temperature sensor. (This step is unnecessary if the sensor is incorporated in the solenoid valve harness).

Caution
Make sure that the manual control lever and the inhibitor switch are removed.

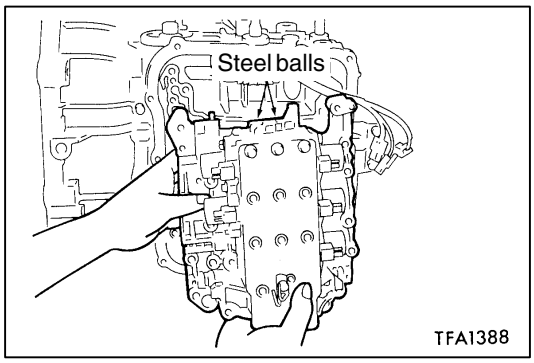

(15) Remove the valve body, gasket and the steel balls (2 pieces).

Caution
Do not lose the steel balls (2 pieces).

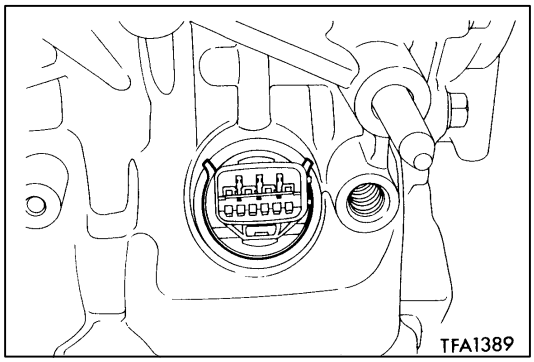

(16) Remove the snap ring, and then remove the solenoid valve harness.

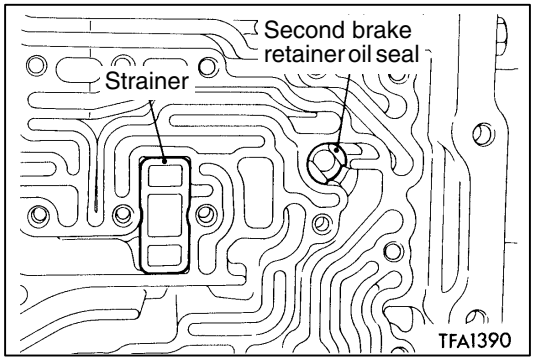

(17) Remove the strainer and the second brake retainer oil seal.

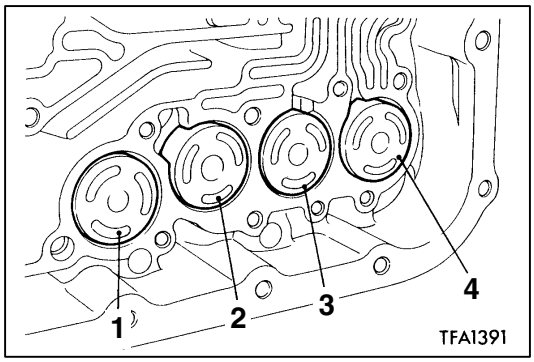

(18) Remove each accumulator piston and spring.

No.	Name
1	For low-reverse brake
2	For underdrive clutch
3	For second brake
4	For overdrive clutch

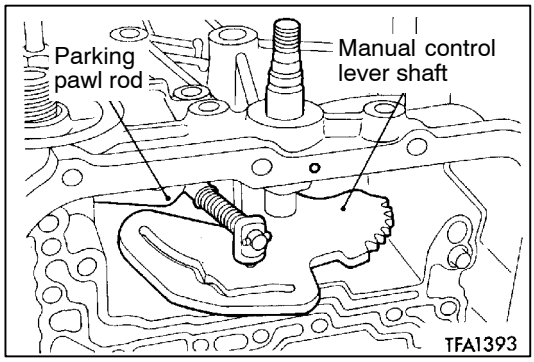

(19) Remove the manual control lever shaft roller.
(20) Remove the manual control lever shaft and the parking pawl rod.

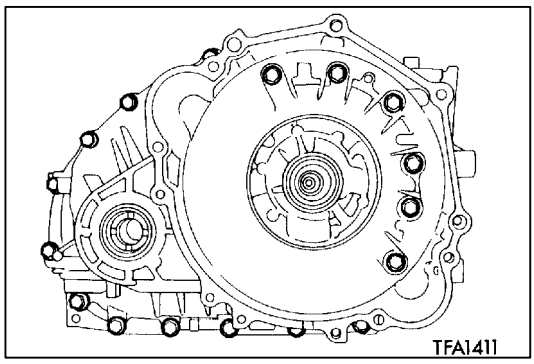

(21) Remove the torque converter housing mounting bolts (18 pieces), and then remove the torque converter housing.

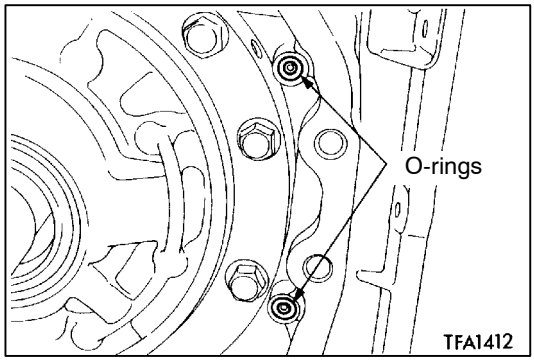

(22) Remove the O-rings (2 pieces).

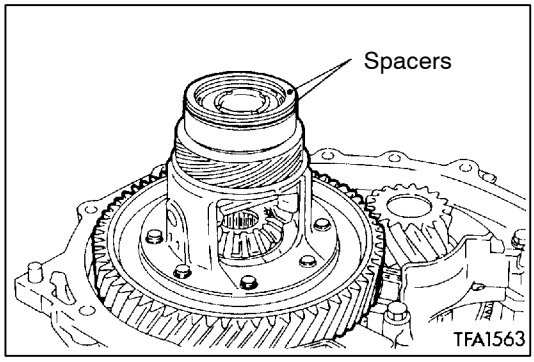

(23) Remove the differential and the spacer(s) (3 pieces . . . . F4A41-1-MRA only). <F4A41>

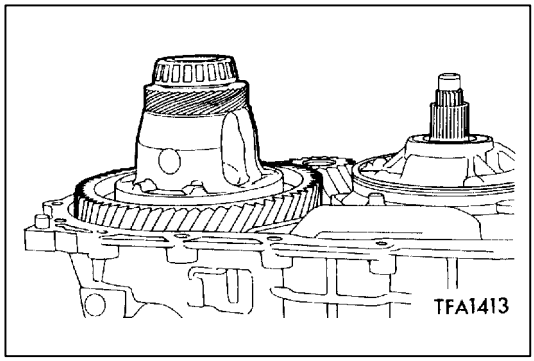

(24) Remove the differential. <F4A42, F4A51>

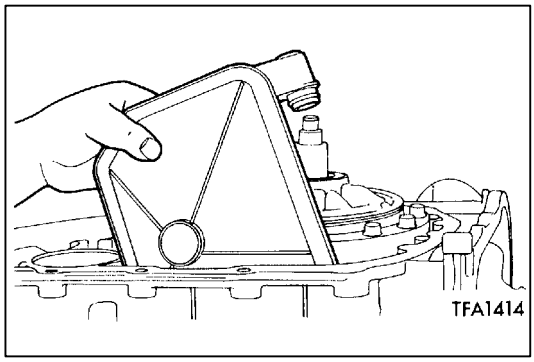

(25) Remove the oil filter.

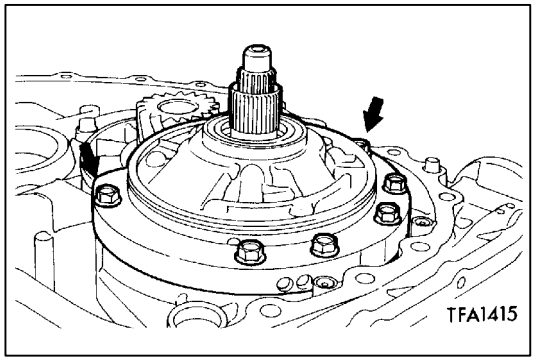

(26) Remove the oil pump mounting bolts (6 pieces).
(27) Install the special tool (MD998333) in the hole A.

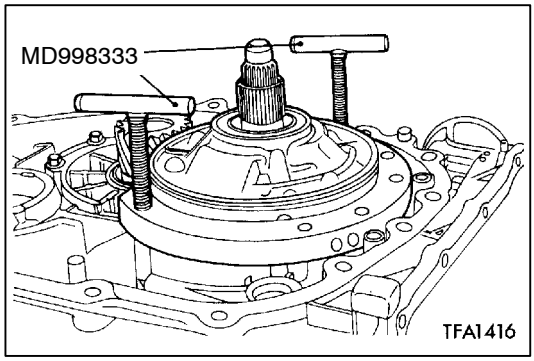

(28) Screw the special tool to remove the oil pump.
(29) Remove the oil pump gasket.

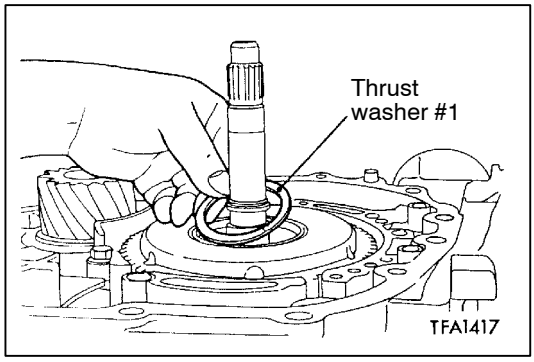

(30) Remove the thrust washer #1.

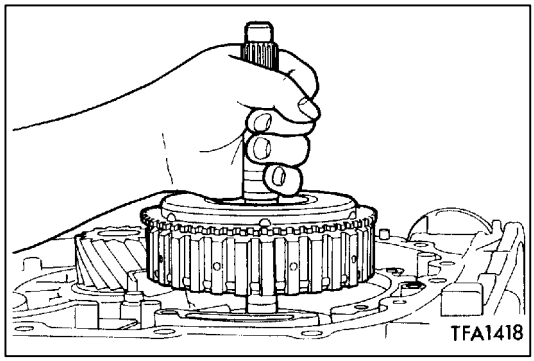

(31) Hold the input shaft, and then remove the underdrive clutch.

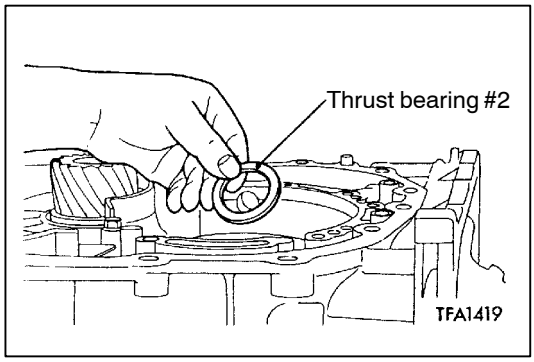

(32) Remove the thrust bearing #2.

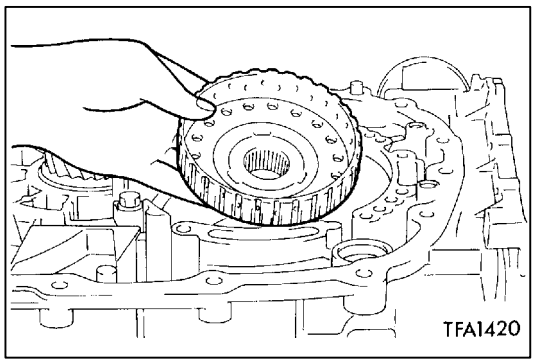

(33) Remove the underdrive clutch hub.

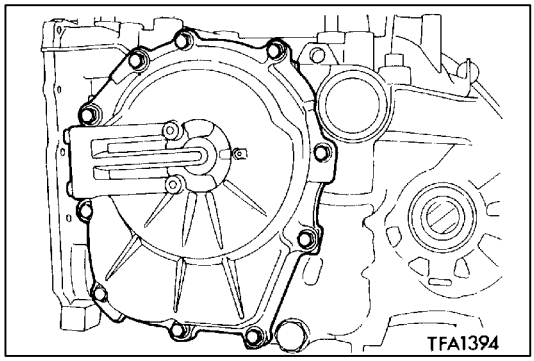

(34) Remove the rear cover.
(35) Remove the thrust race #8.
(36) Remove the seal rings (4 pieces).
(37) Remove the input shaft rear bearing.

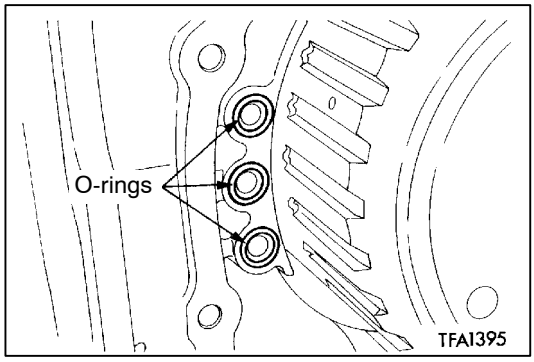

(38) Remove the O-rings (3 pieces).

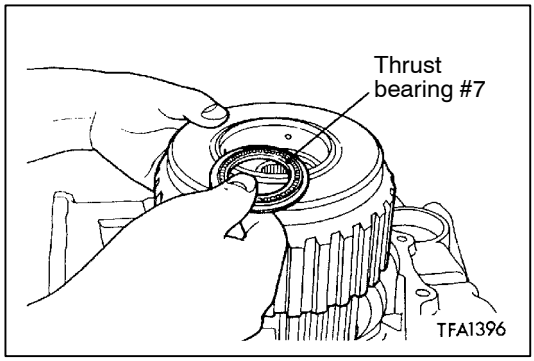

(39) Remove the reverse and overdrive clutch and the thrust bearing #7.

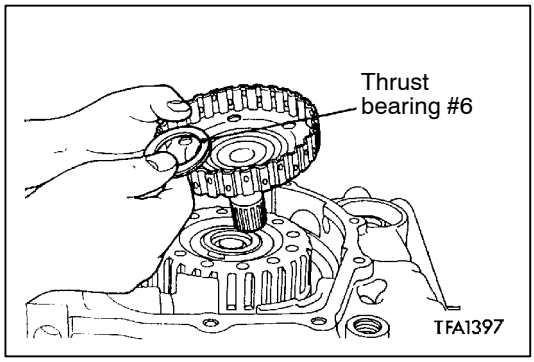

(40) Remove the overdrive clutch hub and the thrust bearing #6.

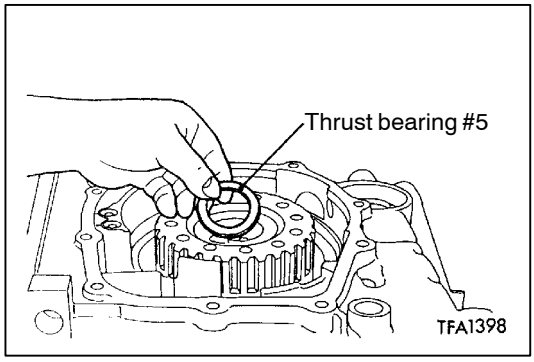

(41) Remove the thrust bearing #5.

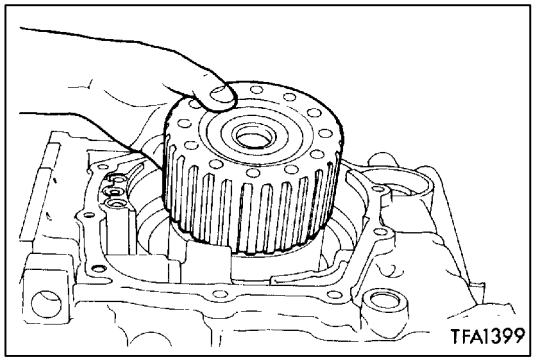

(42) Remove the planetary reverse sun gear.

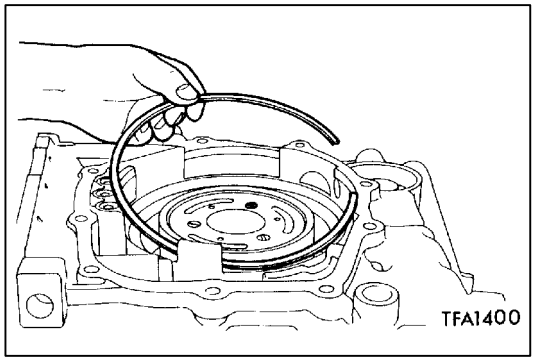

(43) Remove the snap ring.

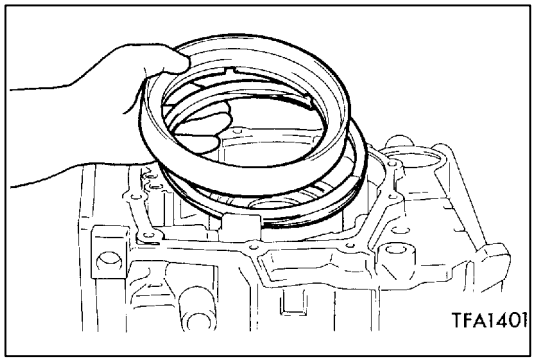

(44) Remove the second brake piston and the return spring.

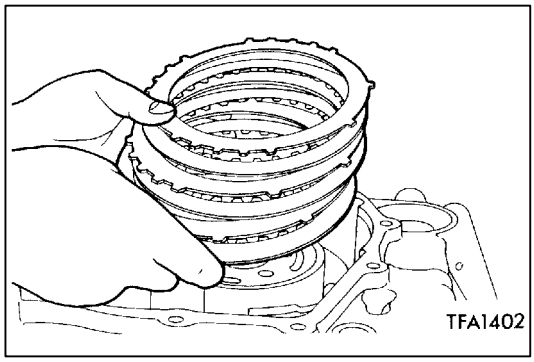

(45) Remove the pressure plate, brake discs and brake plate(s).

No. of brake discs and plates

Model	Brake disc	Brake plate	Pressure plate
F4A41	2	1	1
F4A42	3	2	1
F4A51	4	3	1

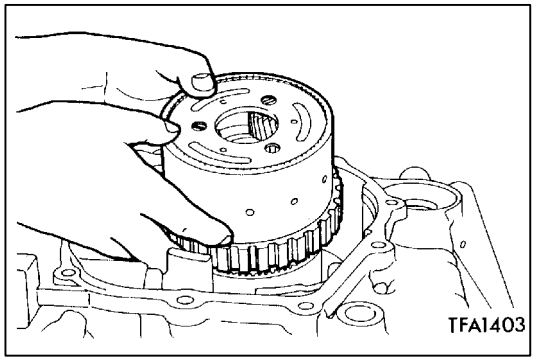

(46) Remove the overdrive planetary carrier <F4A41, F4A42-1 and F4A42-2 without one-way clutch> or planetary carrier assembly <F4A42-2 with one-way clutch and F4A51>.

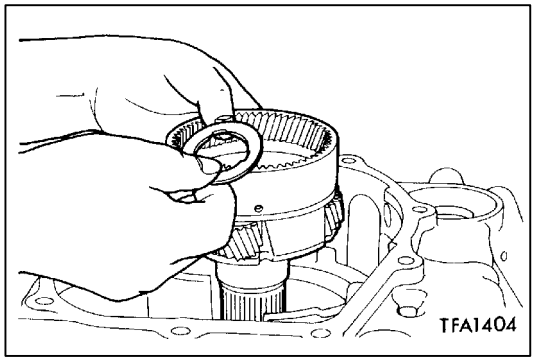

(47) Remove the output planetary carrier and the thrust bearing #4. <F4A41, F4A42-1 and F4A42-2 without one-way clutch>

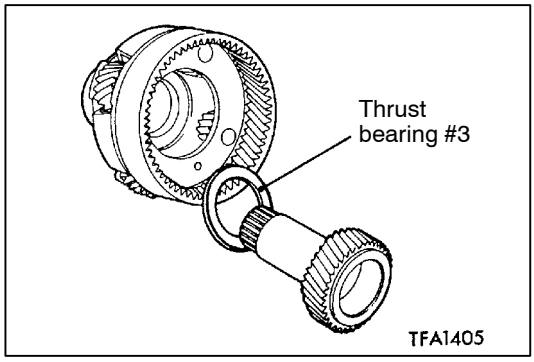

(48) Remove the underdrive sun gear and the thrust bearing #3 from the output planetary carrier. <F4A41, F4A42-1 and F4A42-2 without one-way clutch>

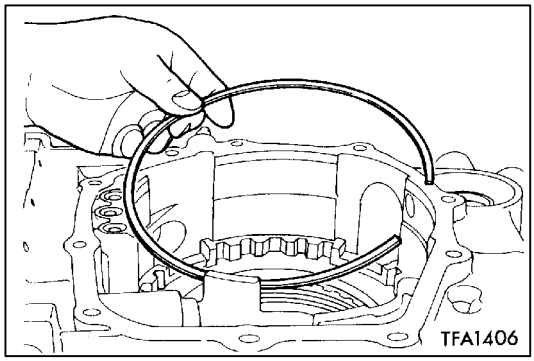

(49) Remove the snap ring.

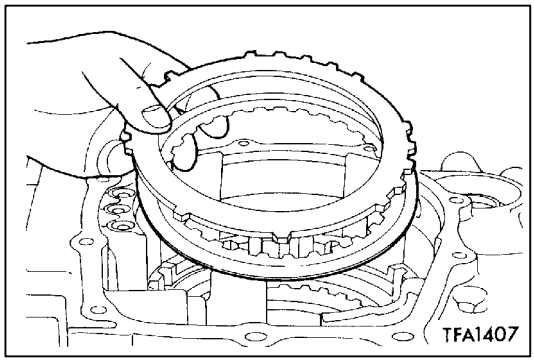

(50) Remove the reaction plate and the brake disc.

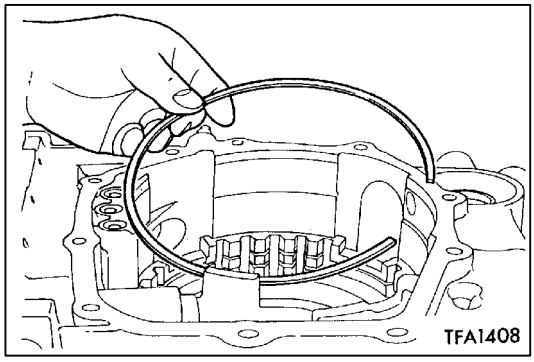

(51) Remove the snap ring.

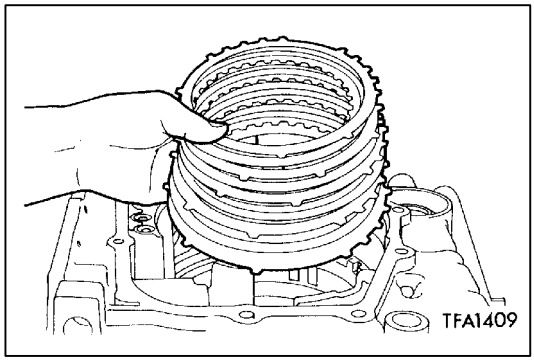

(52) Remove the brake plates, brake discs and pressure plate.

No. of brake discs and plates

Model	Brake disc	Brake plate	Pressure plate
F4A41	4	3	1
F4A42-1	5	4	1
F4A42-2, F4A51	6	5	1

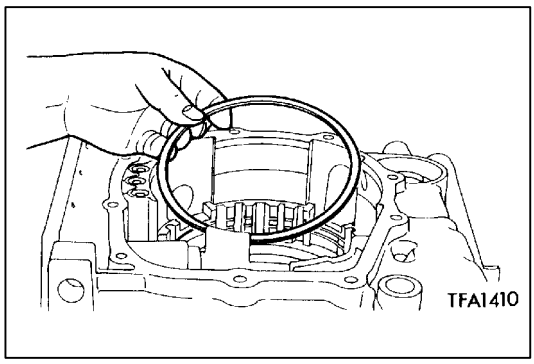

(53) Remove the wave spring.

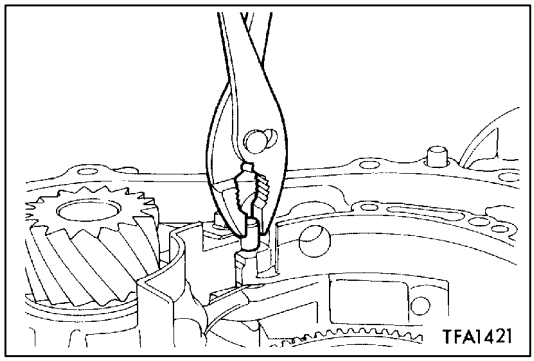

(54) Remove the parking pawl shaft, and then remove the spacer and spring.

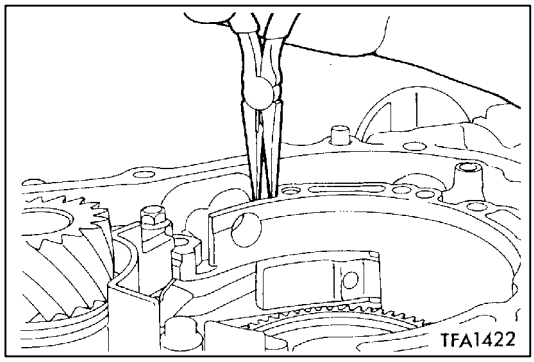

(55) Remove the two parking roller support shafts, and then remove the parking pawl case and parking roller support.

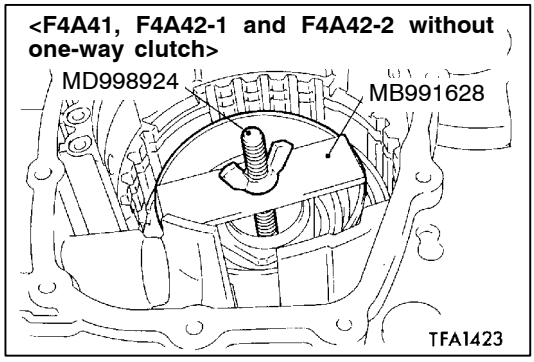

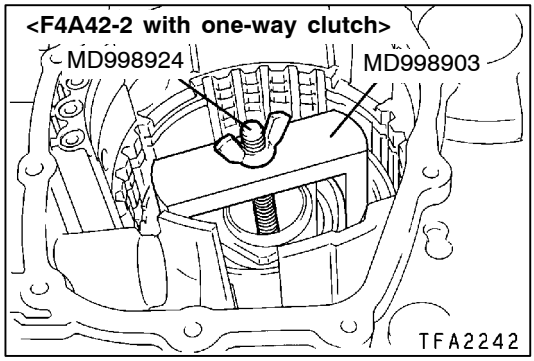

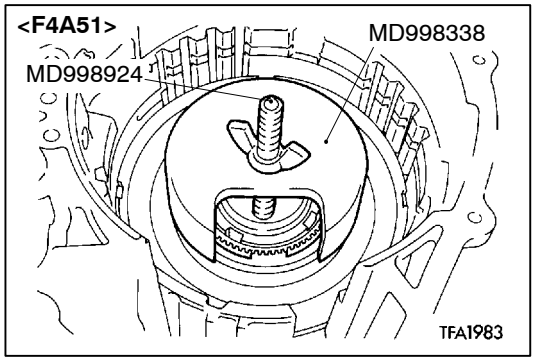

(56) Use the special tool to remove the snap ring.
(57) Remove the one-way clutch inner race <F4A42-2 with one-way clutch and F4A51>, O-ring <F4A42-2 with one-way clutch and F4A51>, spring retainer, return spring and the low-reverse brake piston.

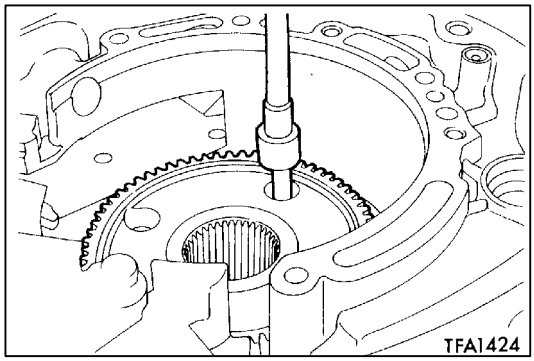

(58) Remove the transfer drive gear bearing mounting bolts as follows:
F4A41, F4A42-1 and F4A42-2 without one-way clutch: Remove all 4 mounting bolts.
F4A42-2 with one-way clutch: First remove 4 or 3 bolts, then turn the gear $^1/_8$ turn (45°) and remove the remaining 3 or 4 bolts (7 bolts in total).
F4A51: First remove 4 bolts, then turn the gear $^1/_8$ turn (45°) and remove the remaining 4 bolts (8 bolts in total).

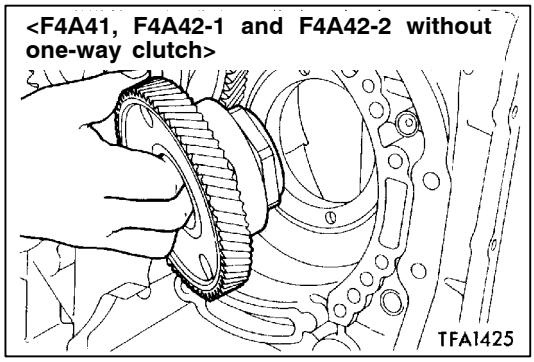

(59) Remove the transfer drive gear.

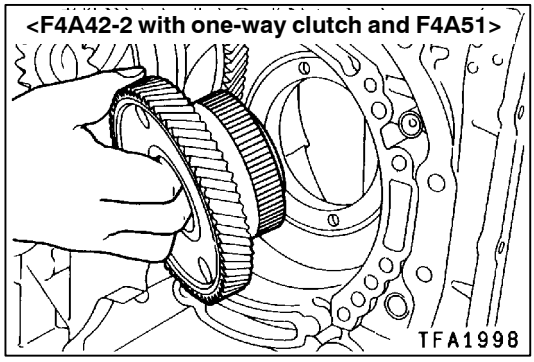

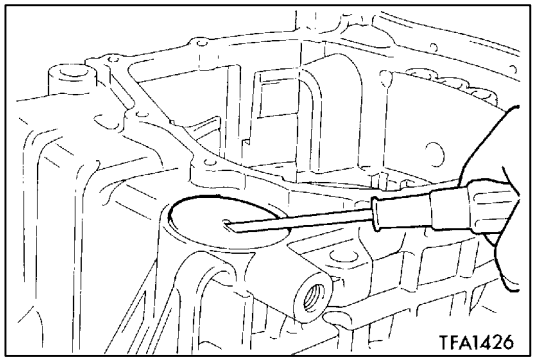

(60) Remove the cap.

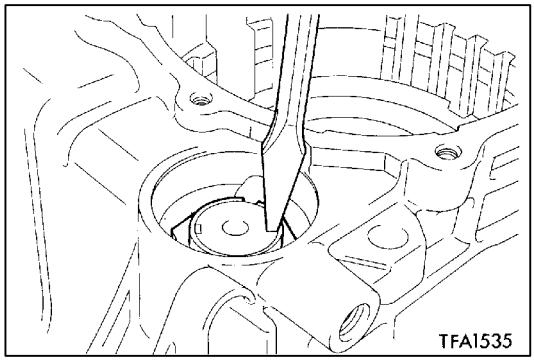

(61) Straighten the locking tab of the output shaft lock nut.

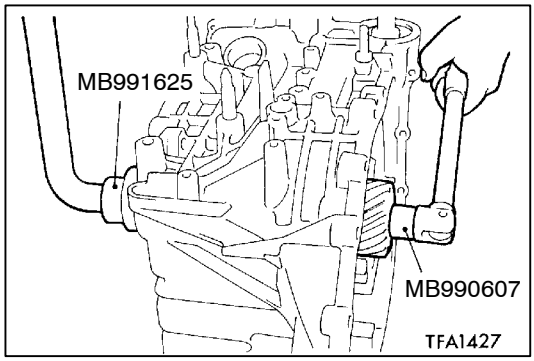

(62) Use the special tool to remove the output shaft lock nut.

Caution
The lock nut is a left-handed screw.

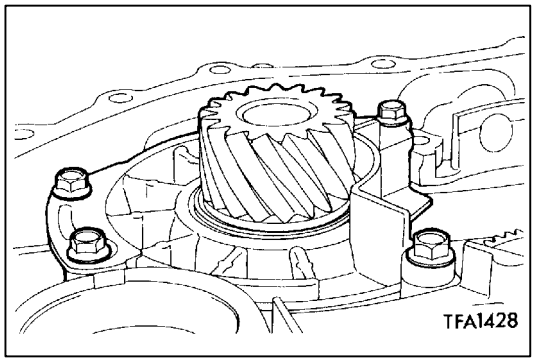

(63) Remove the bearing retainer mounting bolt.

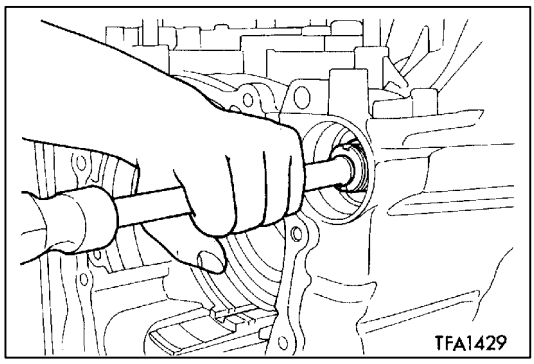

(64) Tap on the rear of the output shaft to remove the output shaft, taper roller bearing and the collar.

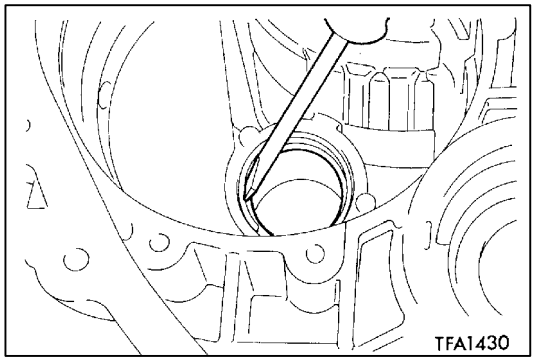

(65) Remove the spacer and the outer race.
(66) Remove the snap ring.

(67) Remove the differential bearing outer race and spacer from the torque converter hosing. <F4A42, F4A51>
(68) Remove the differential bearing outer race from the transmission case. <F4A42, F4A51>

Intentionally blank

REASSEMBLY

Caution

1. **Never reuse the gasket, O-ring, oil seal, etc. Always replace with a new one when reassembling.**
2. **Never use grease other than blue petrolatum jelly and white Vaseline.**
3. **Apply ATF to friction components, rotating parts, and sliding parts before installation. Immerse a new clutch disc or brake disc in ATF for at least two hours before assembling them.**
4. **Never apply sealant or adhesive to gaskets.**
5. **When replacing a bushing, replace the assembly which it belongs to.**
6. **Never use any cloth gloves or any rags during reassembly. Use nylon cloth or paper towels if you need to use something.**
7. **Change the oil in the cooler system.**

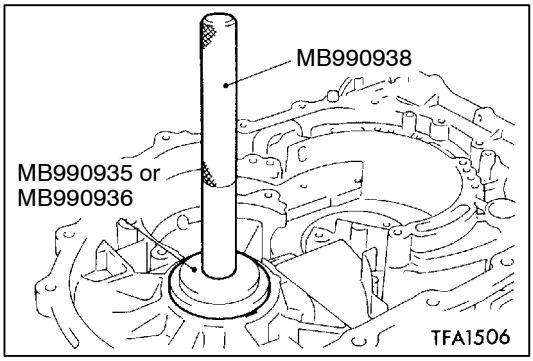

(1) Use the special tools to tap the differential bearing outer race in the transmission case. <F4A42, F4A51>

Model	Special tools No.
F4A42	MB990935, MB990938
F4A51	MB990936, MB990938

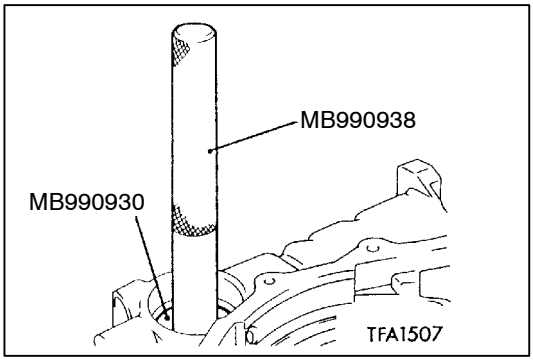

(2) Use the special tools to tap the output shaft bearing outer race in the transmission case.
(3) Install the used spacer and snap ring.

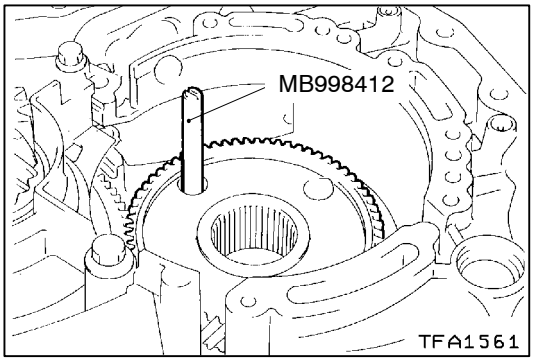

(4) Use the special tool to install the transfer drive gear. <F4A41 from Jan. 1998, F4A42-1 from Jan. 1998, F4A42-2 with one-way clutch and F4A51>

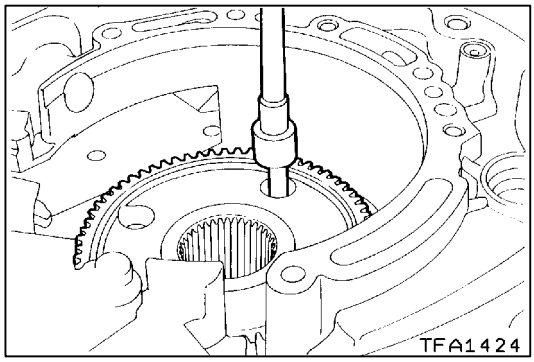

(4a) Tighten the mounting bolts of the transfer drive gear bearing to the specified torque. <F4A41 from Jan. 1998, F4A42-1 from Jan. 1998, F4A42-2 with one-way clutch and F4A51>
F4A41 and F4A42-1 = 4 mounting bolts
F4A42-2 with one-way clutch = 7 mounting bolts
F4A51 = 8 mounting bolts

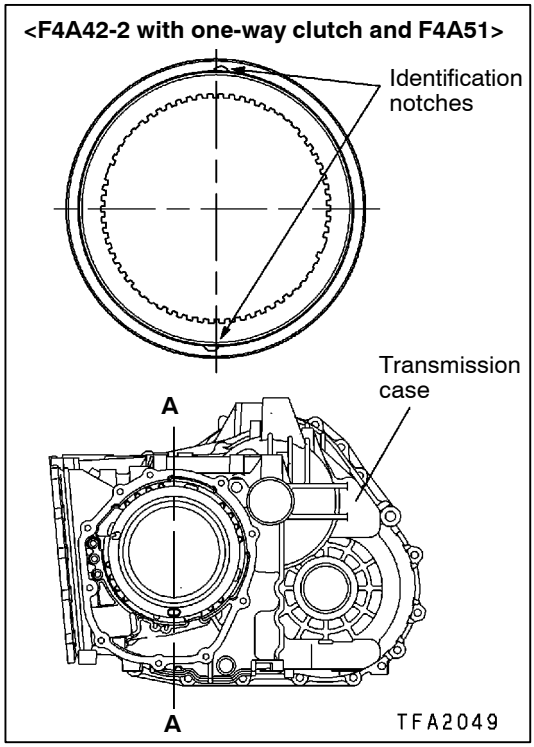

(5) Install the low-reverse brake piston, return spring and spring retainer.
(5a) Check the placement of the identification notches in the one-way clutch inner race. Install the one-way clutch inner race with O-ring to the transfer drive gear bearing so that the notches fall along the A - A line. <F4A42-2 with one-way clutch and F4A51>

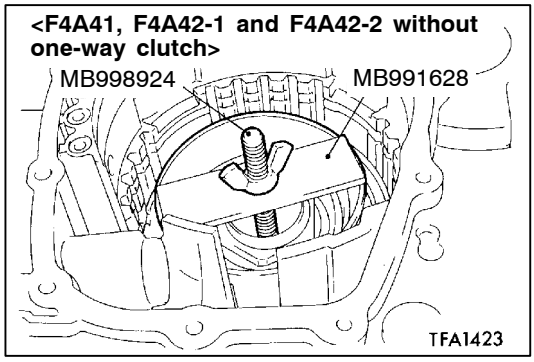

(5b) Use the special tools to install the snap ring.

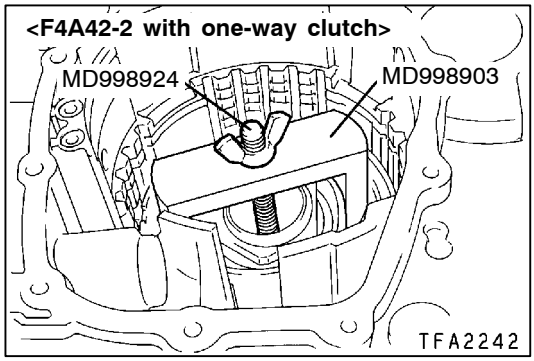

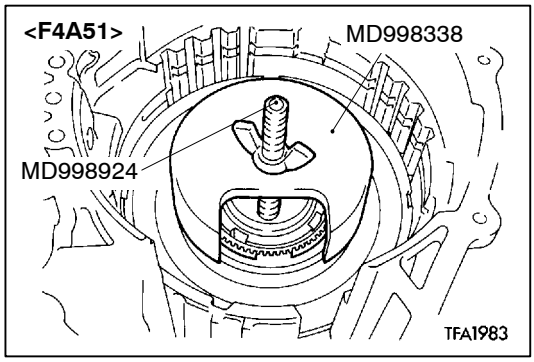

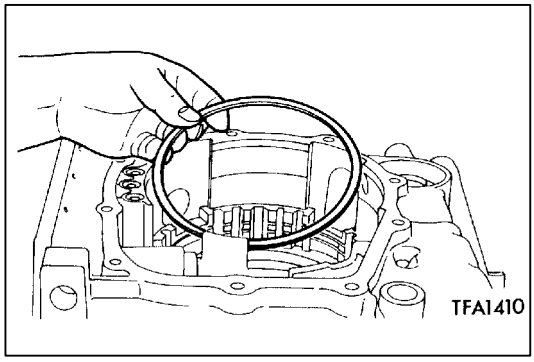

(6) Install the wave spring.

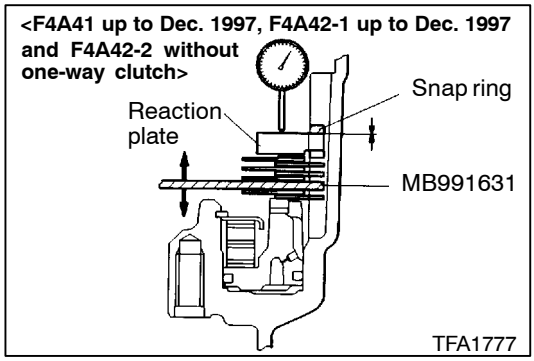

(7) Install the brake disc, brake plate and special tool and snap ring as shown in the figure.

Caution
If necessary, take the measurements in steps 9 to 18 after replacing the pressure plate, brake plate and brake disc.

NOTE
Do not install the pressure plate at this time.

Number of brake discs and plates

Model	Brake disc	Brake plate	Special tool
F4A41	4	3	1
F4A42-1	5	4	1
F4A42-2, F4A51	6	5	1

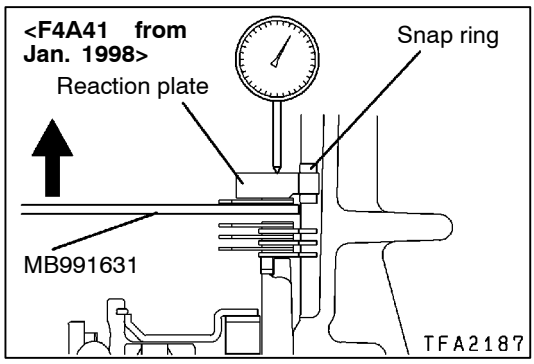

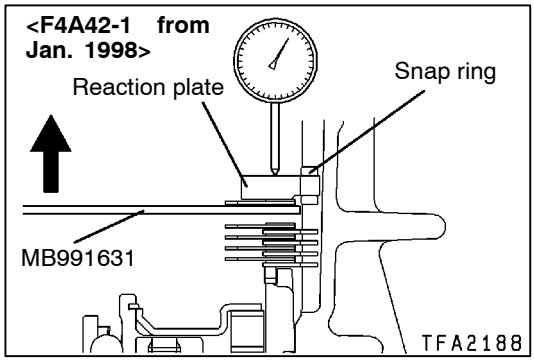

(8) Install the reaction plate and the used snap ring.
(9) Move the special tool to measure the end play, and then replace the snap ring installed in step (8) to adjust the end play to standard value.

Standard value: 0 - 0.16 mm

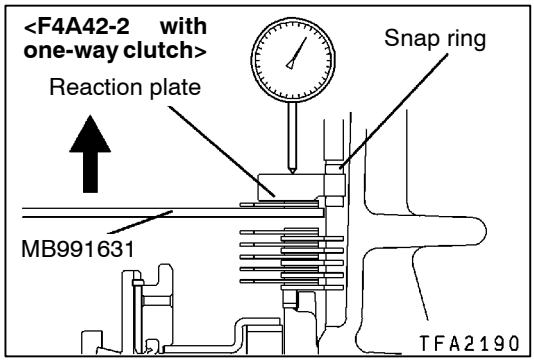

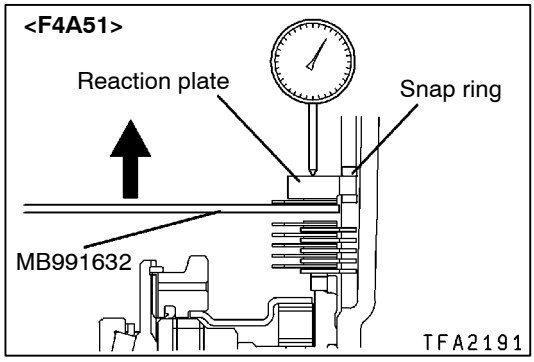

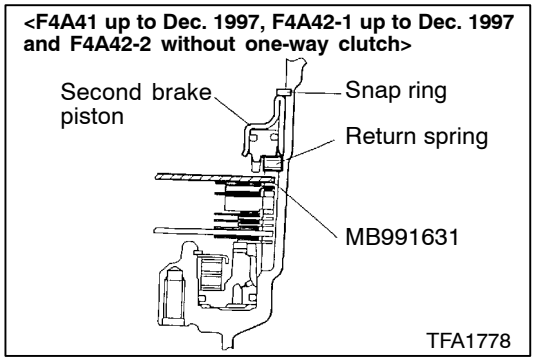

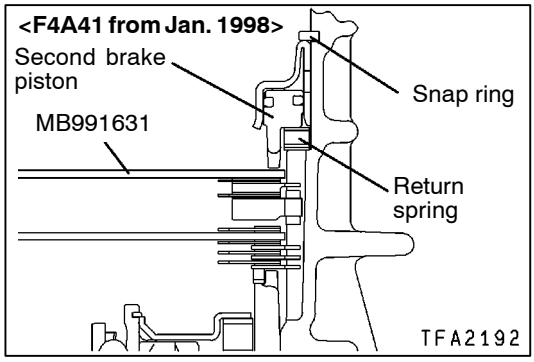

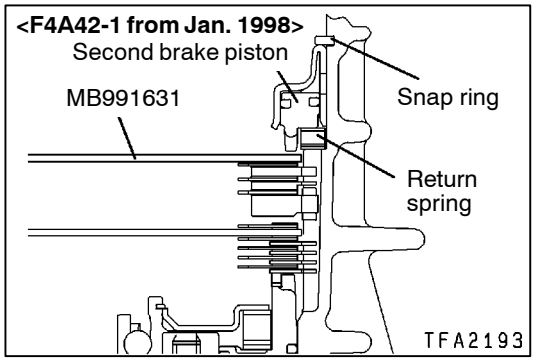

(10) Install the brake disc, brake plate and special tool MB991631 <F4A41, F4A42> or MB991632 <F4A51> as shown in the figure.

Number of brake discs and plates

Model	Brake disc	Brake plate
F4A41	2	1
F4A42	3	2
F4A51	4	3

(11) Install the return spring, second brake piston and snap ring.

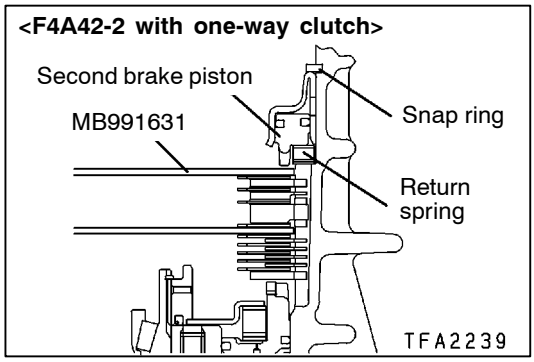

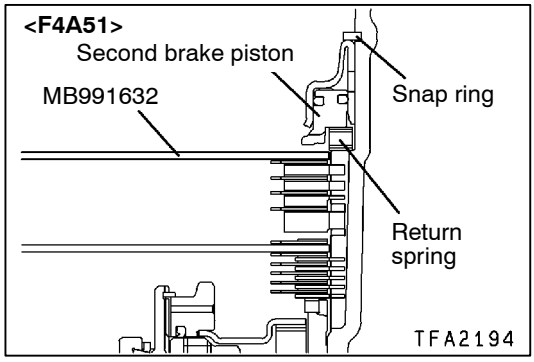

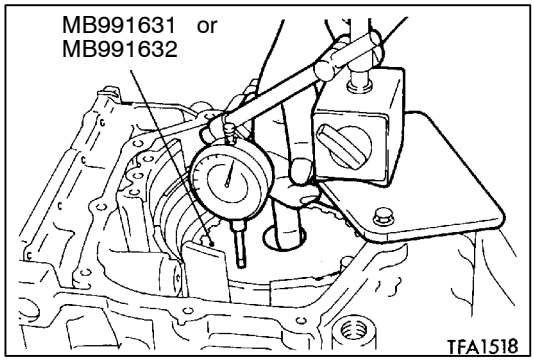

(12) Move the special tool and measure its movement. Select a pressure plate whose thickness corresponds to the measured amount of movement from the following table.

Standard value of end play (Reference):
0.49 - 0.95 mm <F4A41>
0.79 - 1.25 mm <F4A42>
1.09 - 1.55 mm <F4A51>

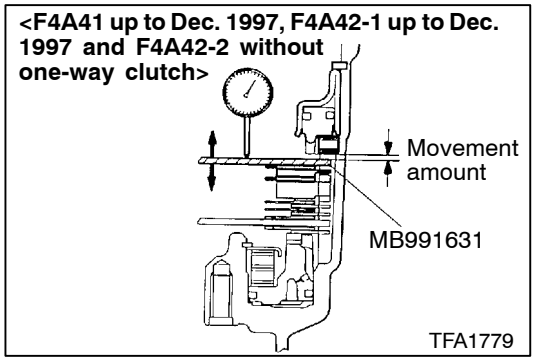

Pressure plate for F4A41 and F4A42

Movement amount mm		Thickness mm	ID symbol	Part No.
F4A41	F4A42			
0.3 - 0.5	0.6 - 0.8	1.6	L	MD759567
0.5 - 0.7	0.8 - 1.0	1.8	1	MD759414
0.7 - 0.9	1.0 - 1.2	2.0	0	MD759415
0.9 - 1.1	1.2 - 1.4	2.2	2	MD759416
1.1 - 1.3	1.4 - 1.6	2.4	4	MD759417
1.3 - 1.5	1.6 - 1.8	2.6	6	MD759418

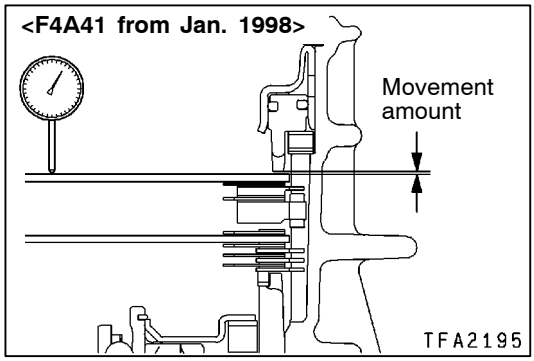

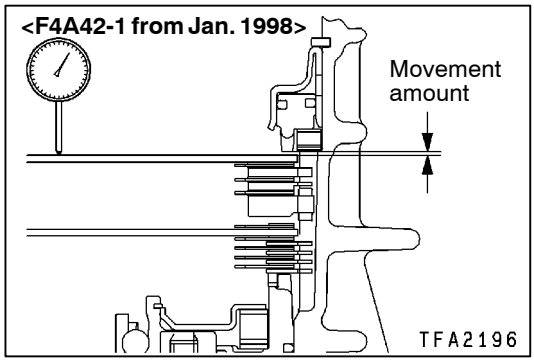

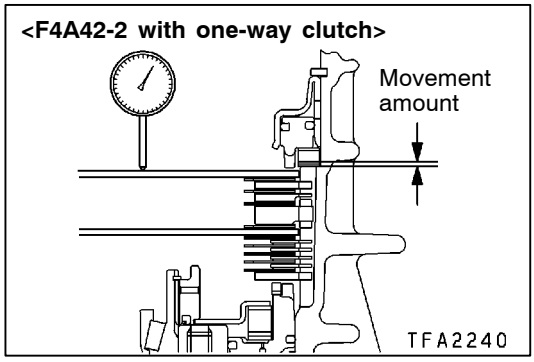

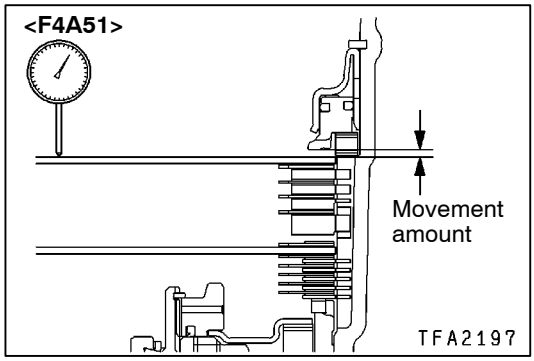

Pressure plate for F4A51

Movement amount mm	Thickness mm	ID symbol	Part No.
1.1 - 1.3	1.8	E	MD759425
1.3 - 1.5	2.0	D	MD759426
1.5 - 1.7	2.2	C	MD759427
1.7 - 1.9	2.4	B	MD759428
1.9 - 2.1	2.6	A	MD759429
2.1 - 2.3	2.8	0	MD759430

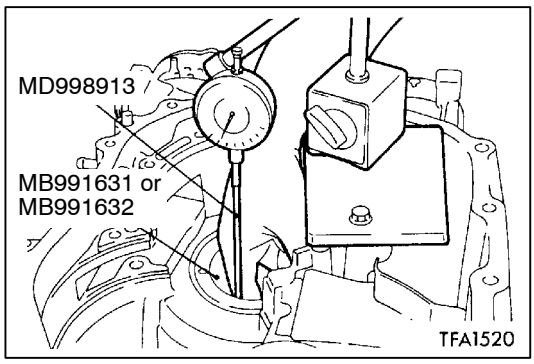

(13) Reverse the transmission.

(14) Install the special tool (MD998913) in a dial gauge, and then move the special tool (MB991631 or MB991632) and measure its movement.
Select a pressure plate whose thickness corresponds to the measured amount of movement from the following table.

Standard value of end play (Reference):
1.05 - 1.51 mm <F4A41>
1.35 - 1.81 mm <F4A42-1>
1.65 - 2.11 mm <F4A42-2 and F4A51>

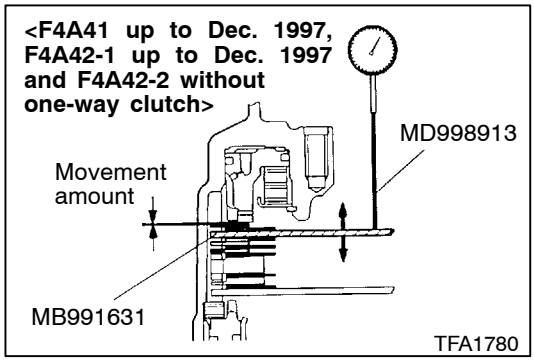

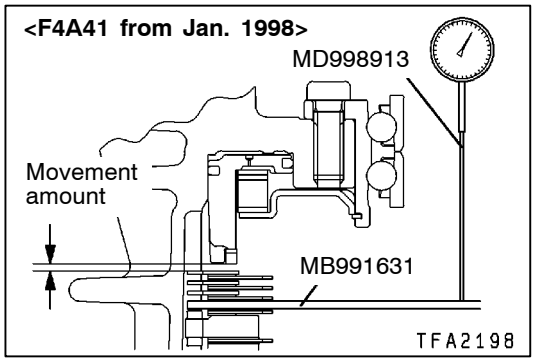

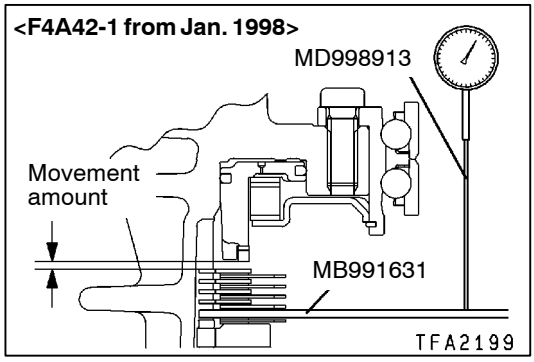

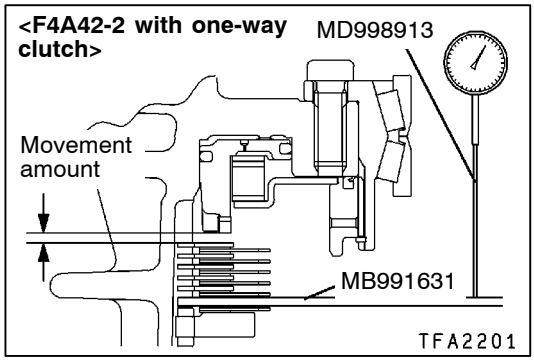

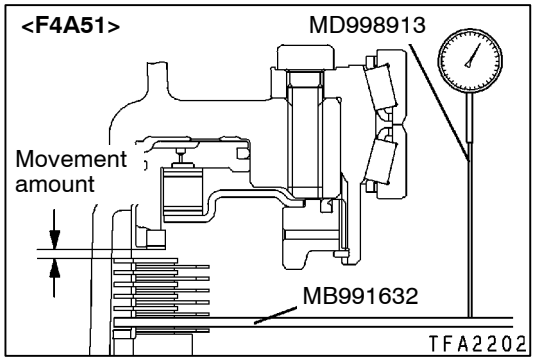

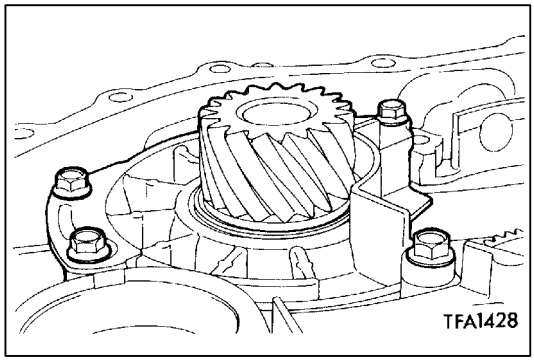

Pressure plate for F4A41 and F4A42

Movement amount mm			Thick-ness mm	ID symbol	Part No.
F4A41	F4A42-1	F4A42-2			
0.7 - 0.9	1.0 - 1.2	1.3 - 1.5	1.6	L	MD759567
0.9 - 1.1	1.2 - 1.4	1.5 - 1.7	1.8	1	MD759414
1.1 - 1.3	1.4 - 1.6	1.7 - 1.9	2.0	0	MD759415
1.3 - 1.5	1.6 - 1.8	1.9 - 2.1	2.2	2	MD759416
1.5 - 1.7	1.8 - 2.0	2.1 - 2.3	2.4	4	MD759417
1.7 - 1.9	2.0 - 2.2	2.3 - 2.5	2.6	6	MD759418
1.9 - 2.1	2.2 - 2.4	2.5 - 2.7	2.8	8	MD759419
2.1 - 2.3	2.4 - 2.6	2.7 - 2.9	3.0	D	MD759420

Pressure plate for F4A51

Movement amount mm	Thickness mm	ID symbol	Part No.
1.0 - 1.2	1.6	F	MD759568
1.2 - 1.4	1.8	E	MD759425
1.4 - 1.6	2.0	D	MD759426
1.6 - 1.8	2.2	C	MD759427
1.8 - 2.0	2.4	B	MD759428
2.0 - 2.2	2.6	A	MD759429
2.2 - 2.4	2.8	0	MD759430
2.4 - 2.6	3.0	1	MD759431

(15) Remove the parts installed from steps (6) to (14).
(16) Install the output shaft in the transmission case and tighten the mounting bolts of the output shaft bearing retainer to the specified torque.

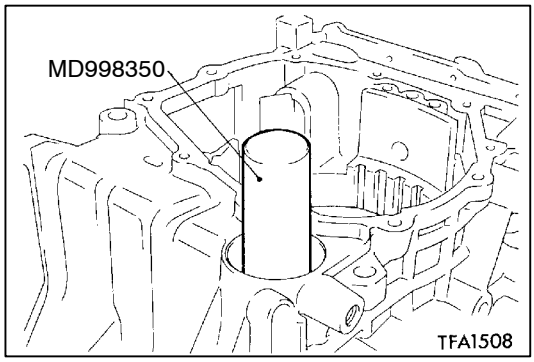

(17) Use the special tool to install the collar and taper roller bearing in the output shaft.

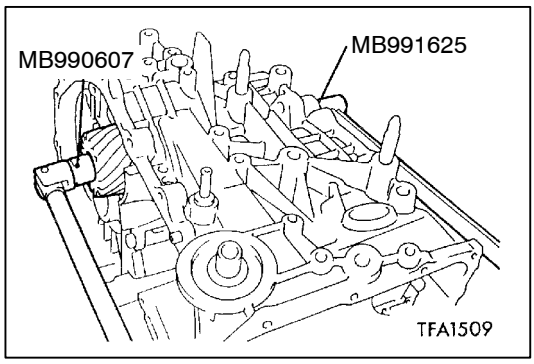

(18) Apply ATF to a new lock nut, and use the special tool to tighten the lock nut to the specified torque. Then turn back one turn, and tighten to the specified torque again.

Caution
The lock nut is a left-hand screw.

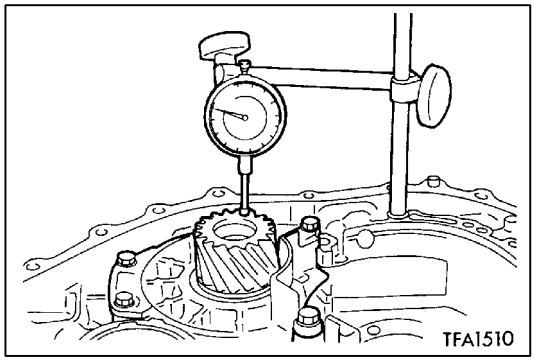

(19) Move the output shaft to measure operating amount (A), and then replace the spacer installed in step (3) with a new one which thickness is within the following value.

[A (operating amount) + B (thickness of the old spacer) + 0.01 mm) to [A (operating amount) + B (thickness of the old spacer) + 0.09 mm]

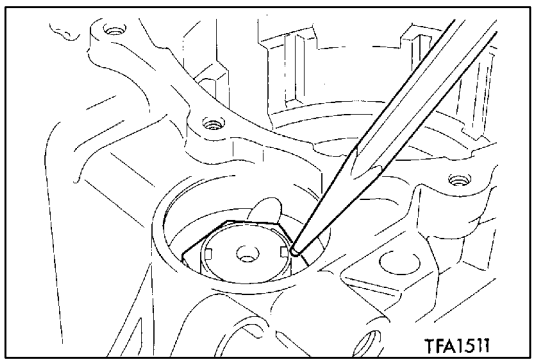

(20) Stake the lock nut with a punch (two pieces).

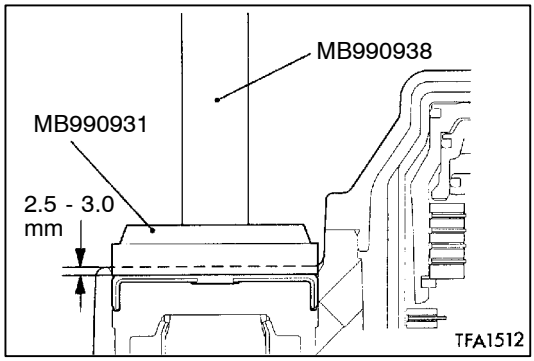

(21) Install the cap as shown in the figure.

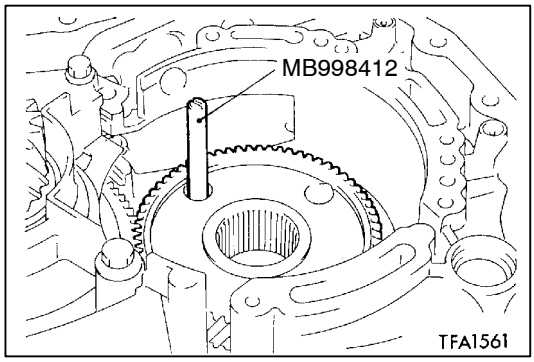

(22) Use the special tool to install the transfer drive gear. <F4A41 up to Dec. 1997, F4A42-1 up to Dec. 1997 and F4A42-2 without one-way clutch>

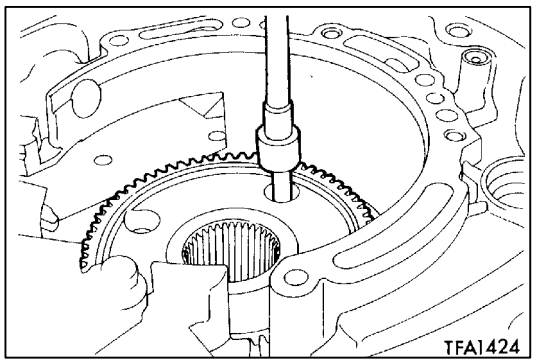

(23) Tighten the four mounting bouts of the transfer drive gear to the specified torque. <F4A41 up to Dec. 1997, F4A42-1 up to Dec. 1997 and F4A42-2 without one-way clutch>

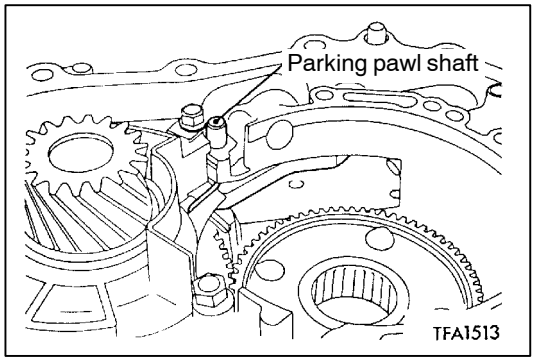

(24) Install the parking pawl, spacer, and spring. Then install the parking pawl shaft.

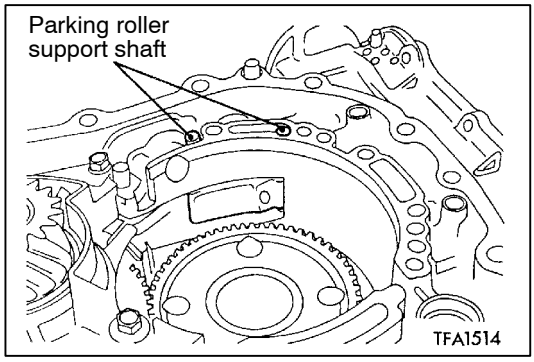

(25) Install the parking roller support, and then the two parking roller support shafts.

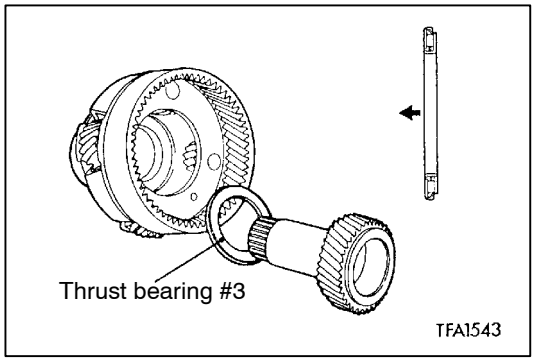

(26) Install the underdrive sun gear and thrust bearing #3 to the output planetary carrier. <F4A41, F4A42-1 and F4A42-2 without one-way clutch>

Caution
Be careful about the installation direction of the thrust bearing.

<F4A41, F4A42>

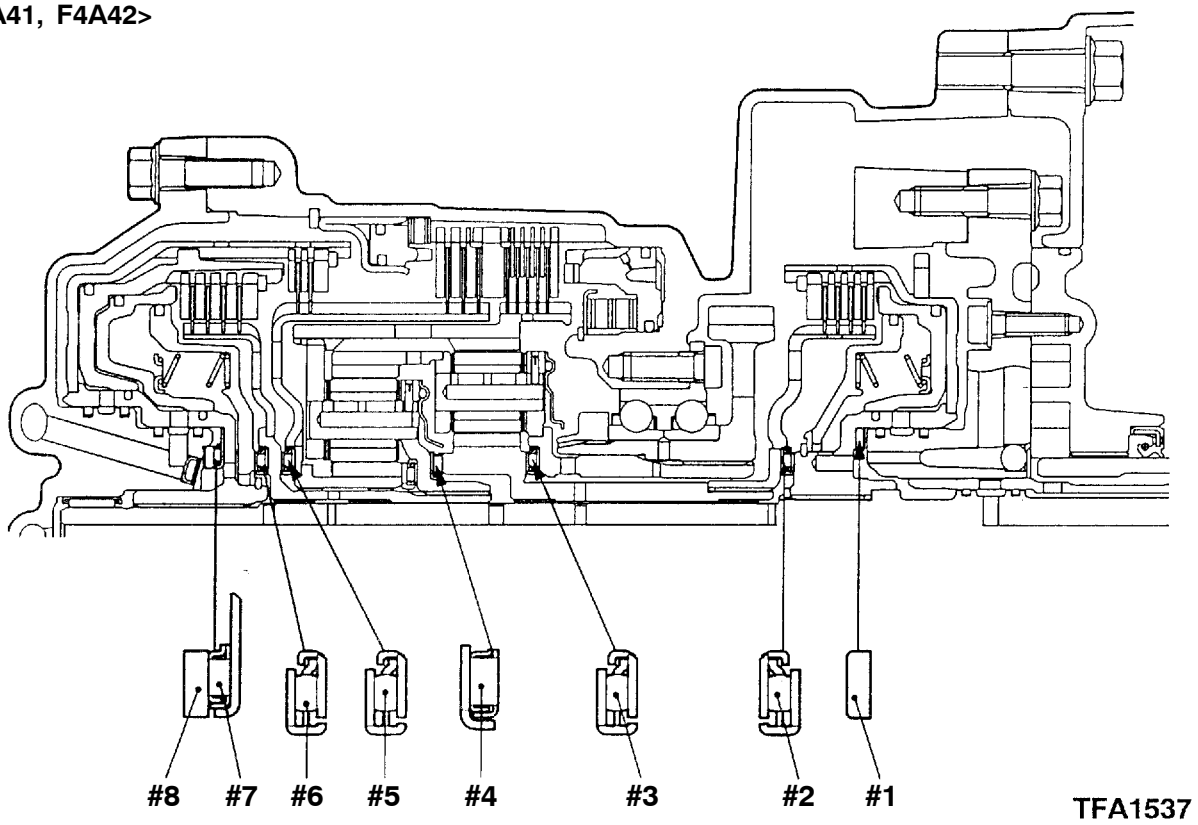

IDENTIFICATION OF THRUST BEARINGS, THRUST RACES, AND THRUST WASHERS

mm

Symbol	O.D.	I.D.	Thickness	Part number	Symbol	O.D.	I.D.	Thickness	Part number
#1	59	47	1.8	MD754509	#8	48.9	37	1.6	MD707267
			2.0	MD754508				1.7	MD759681
			2.2	MD754507				1.8	MD723064
			2.4	MD753793				1.9	MD754794
			2.6	MD753794				2.0	MD707268
			2.8	MD753795				2.1	MD754795
#2	49	36	3.6	MD756846				2.2	MD723065
#3	49	36	3.6	MD756846				2.3	MD754796
#4	45.3	31	3.3	MD757647				2.4	MD724358
#5	49	36	3.6	MD756846				2.5	MD754797
#6	49	36	3.6	MD756846				2.6	MD754798
#7	59	37	2.8	MD754595					

<F4A51>

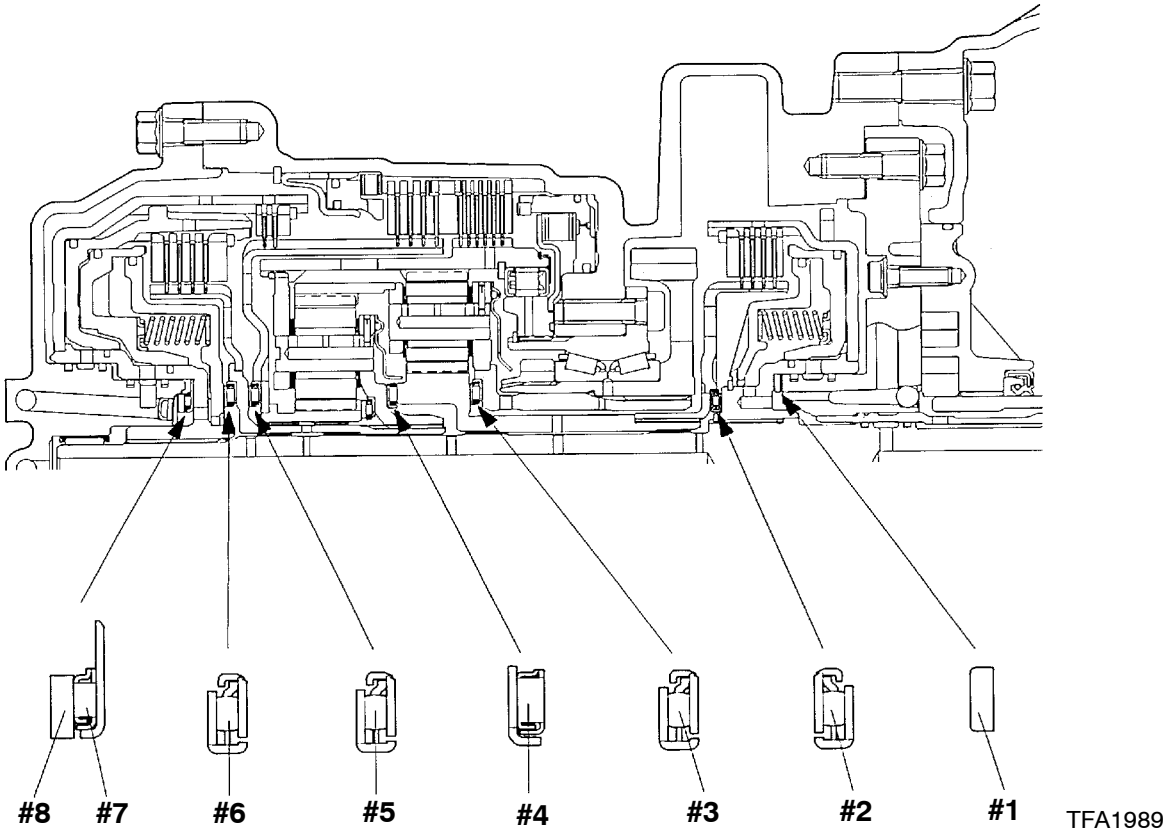

IDENTIFICATION OF THRUST BEARINGS, THRUST RACES, AND THRUST WASHERS

mm

Symbol	O.D.	I.D.	Thickness	Part number	Symbol	O.D.	I.D.	Thickness	Part number
#1	59	47	1.8	MD754509	#8	48.9	37	1.6	MD707267
			2.0	MD754508				1.7	MD759681
			2.2	MD754507				1.8	MD723064
			2.4	MD753793				1.9	MD754794
			2.6	MD753794				2.0	MD707268
			2.8	MD753795				2.1	MD754795
#2	49	36	3.6	MD756846				2.2	MD723065
#3	49	36	3.6	MD756846				2.3	MD754796
#4	55.4	38.5	3.3	MD761683				2.4	MD724358
#5	57	38.5	4.1	MD758556				2.5	MD754797
#6	57	38.5	4.1	MD758556				2.6	MD754798
#7	59	37	2.8	MD754595					

Intentionally blank

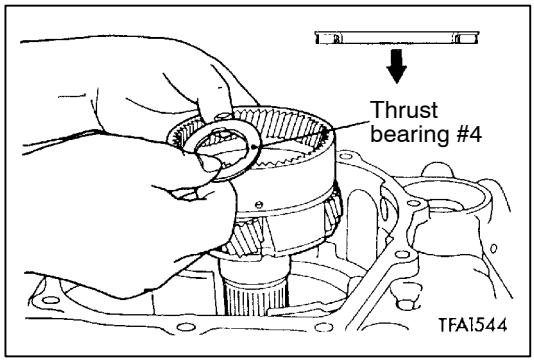

(27) Install the output planetary carrier and thrust bearing #4. <F4A41, F4A42-1 and F4A42-2 without one-way clutch>

Caution
Be careful about the installation direction of the thrust bearing.

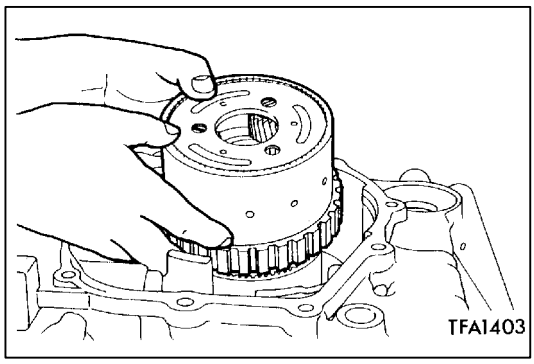

(28) Install the overdrive planetary carrier <F4A41, F4A42-1 and F4A42-2 without one-way clutch> or planetary carrier assembly <F4A42-2 with one-way clutch and F4A51>.

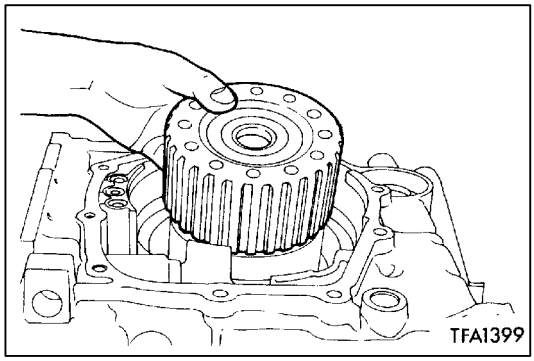

(29) Install the planetary reverse sun gear.

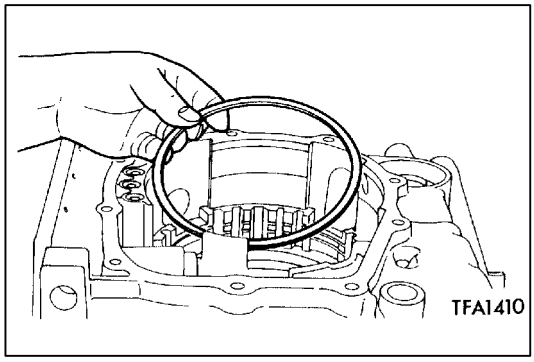

(30) Install the wave spring.

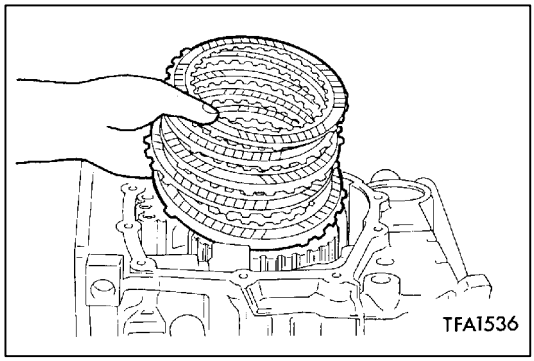

(31) Install the pressure plate, brake disc, and brake plate.

Number of brake discs and plates

Model	Brake disc	Brake plate	Pressure plate
F4A41	4	3	1
F4A42-1	5	4	1
F4A42-2, F4A51	6	5	1

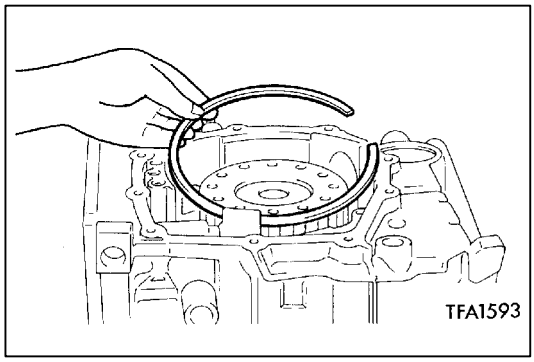

(32) Install the snap ring.

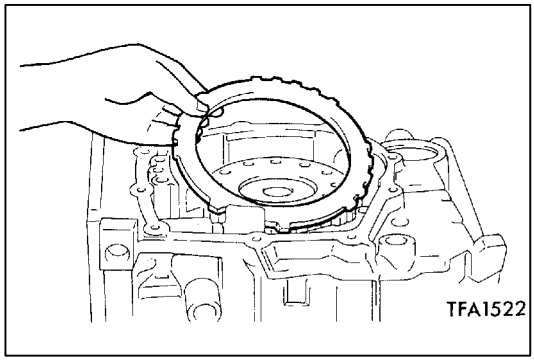

(33) Install the reaction plate.

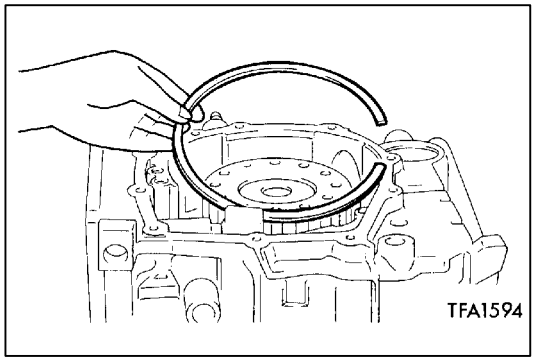

(34) Install the snap ring.

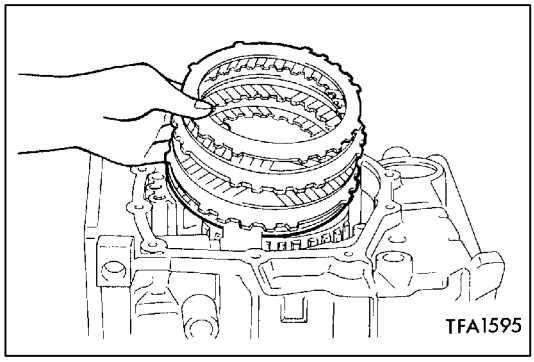

(35) Install the brake disc, brake plate, and pressure plate.

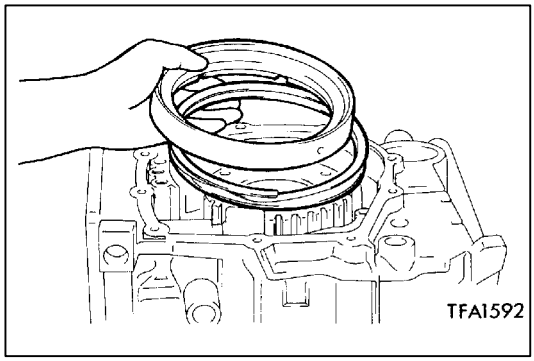

(36) Install the return spring and second brake piston.

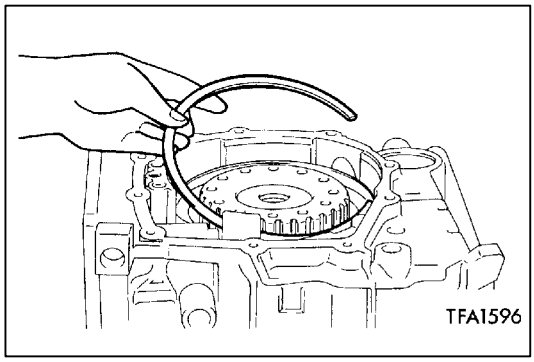

(37) Install the snap ring.

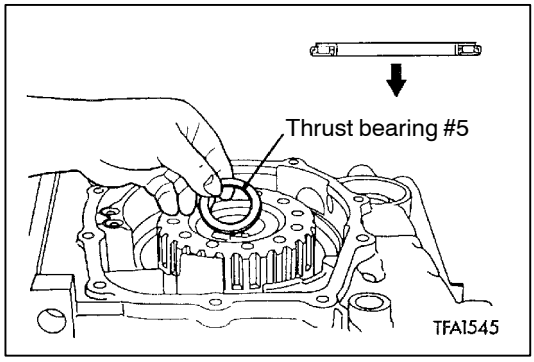

(38) Install the thrust bearing #5.

Caution
Be careful about the installation direction of the thrust bearing.

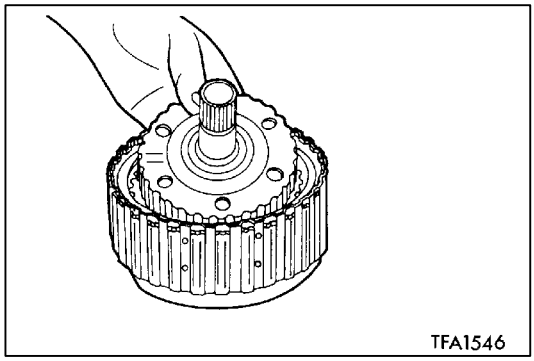

(39) Install the overdrive clutch hub and thrust bearing #6 to the reverse and overdrive clutch.

Caution
Be careful about the installation direction of the thrust bearing

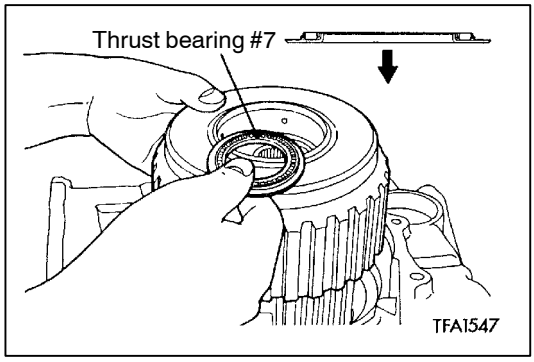

(40) Install the reverse and overdrive clutch, and thrust bearing #7.

Caution
Be careful about the installation direction of the thrust bearing

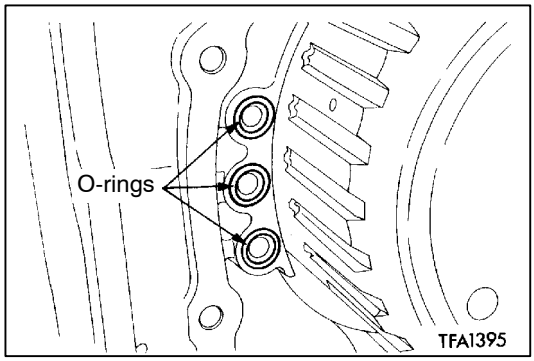

(41) Install the three O-rings.

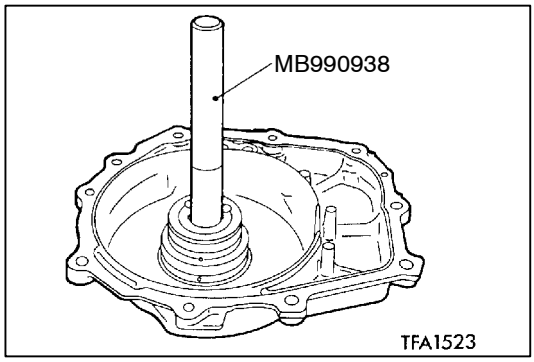

(42) Use special tool and tap the input shaft bearing in the rear cover.
(43) Install the four seal rings in the grooves of the rear cover.

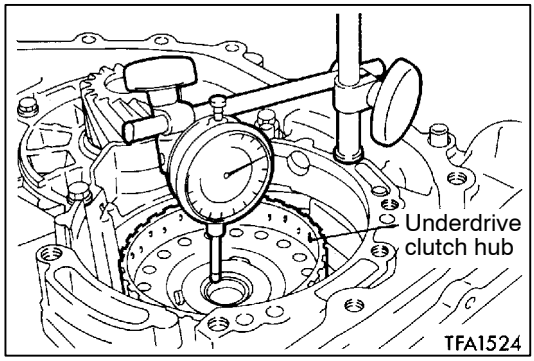

(44) Install the thinnest thrust race #8 (thickness 1.6 mm: part No. MD707267) on thrust bearing #7, then install the rear cover and tighten the bolts to the specified torque.
(45) Measure end play of the underdrive sun gear and record the measurement value.

NOTE
Installing the underdrive clutch hub makes it easy to measure the end play of the underdrive sun gear.

Standard value: 0.25 - 0.45 mm

Select a thrust race #8 whose thickness corresponds to the measured value from the table below, and replace the thrust race installed in step (44) with the selected one.

Measurement value mm	Thickness mm	Part No.
0.3 - 0.4	1.6	MD707267
0.4 - 0.5	1.7	MD759681
0.5 - 0.6	1.8	MD723064
0.6 - 0.7	1.9	MD754794
0.7 - 0.8	2.0	MD707268
0.8 - 0.9	2.1	MD754795
0.9 - 1.0	2.2	MD723065
1.0 - 1.1	2.3	MD754796
1.1 - 1.2	2.4	MD724358
1.2 - 1.3	2.5	MD754797
1.3 - 1.4	2.6	MD754798

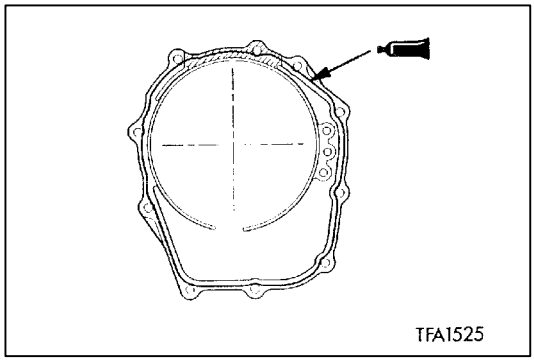

(46) Squeeze out the liquid gasket of 1.6 mm in diameter and apply it to the shown points of the rear cover.

Liquid gasket:
MITSUBISHI genuine sealant Part No. MD974421 or equivalent

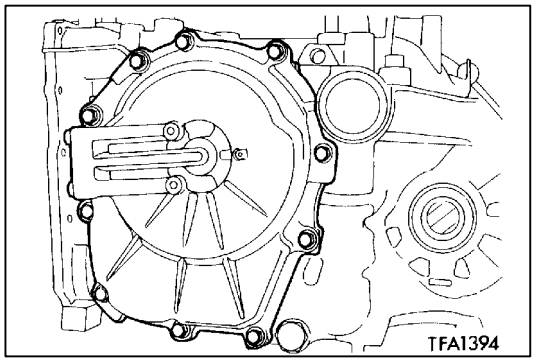

(47) Install the rear cover, and tighten its mounting bolts to the specified torque.

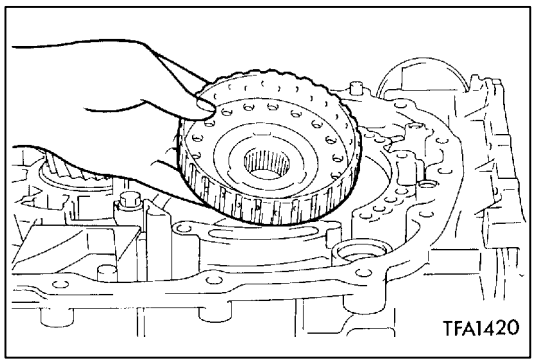

(48) Install the underdrive clutch hub.

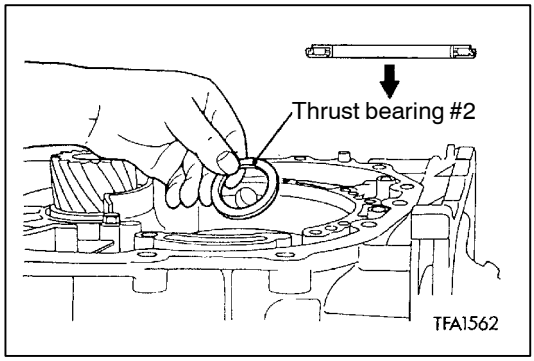

(49) Install the thrust bearing #2.

Caution
Install the thrust bearing in correct direction.

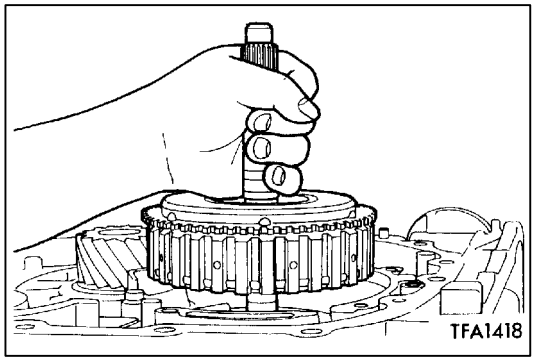

(50) Hold the input shaft, and install the underdrive clutch.

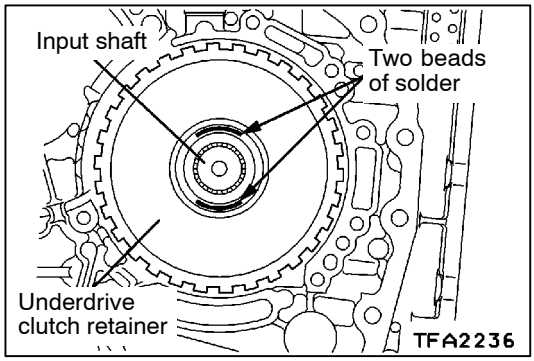

(50a) Place two beads of solder [each 10 mm in length, 3.5 mm in diameter] on the underdrive clutch retainer as shown in the illustration.

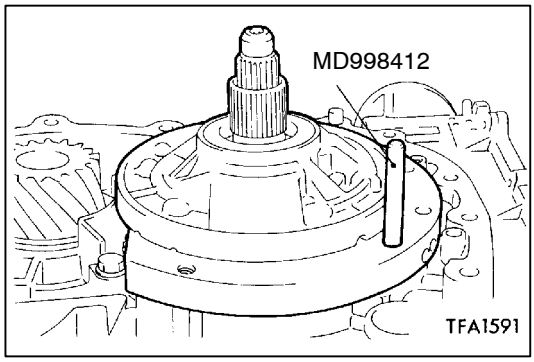

(50b) Install special tool in the illustrated place.
(50c) Install the oil pump to the transaxle case.

NOTE
Do not install the oil pump gasket at this time.

(50d) Tighten the oil pump mounting bolts (6 pieces) to the specified torque.

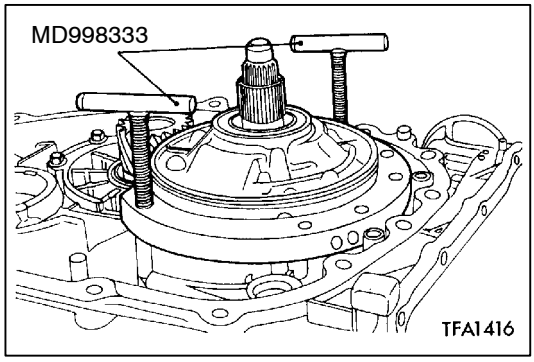

(50e) Remove the oil pump mounting bolts.
(50f) Using special tool, remove the oil pump, and then take out the crushed solders.

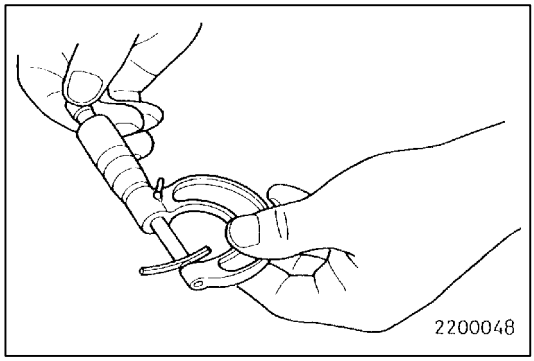

(50g) Use a micrometer to measure the thickness of the crushed solder beads and record the measured value.
(50h) Select a thrust washer # 1 whose thickness corresponds to the measured value from table below.

Measurement value mm	Thickness mm	ID symbol	Part No.
2.25 - 2.45	1.8	18	MD754509
2.45 - 2.65	2.0	20	MD754508
2.65 - 2.85	2.2	22	MD754507
2.85 - 3.05	2.4	24	MD753793
3.05 - 3.25	2.6	26	MD753794
3.25 - 3.45	2.8	28	MD753795

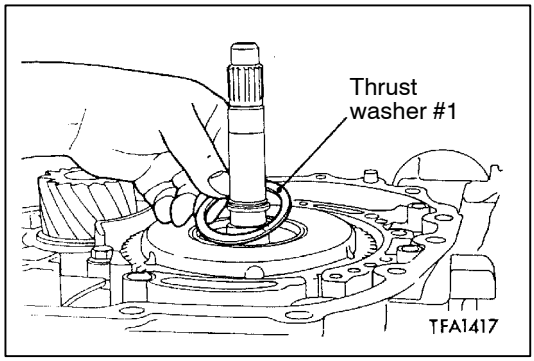

(51) Install the used thrust washer #1 that was selected in step (50h) on the underdrive clutch retainer.

Intentionally blank

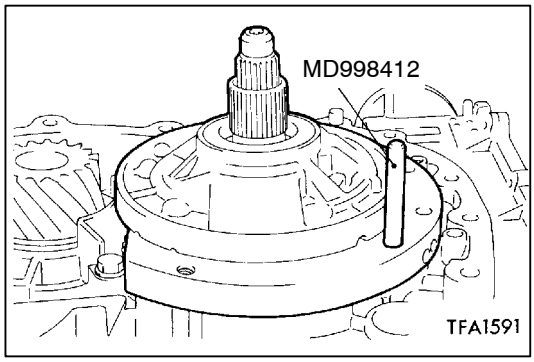

(52) Use the special tool to install a new oil pump gasket and oil pump.

Caution
Never reuse the old gasket.

(53) Tighten the oil pump mounting bolts to the specified torque.

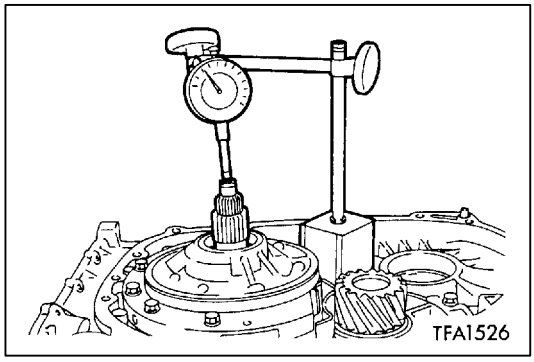

(54) Make sure that the input shaft end play meets the standard value.

Standard value: 0.70 - 1.45 mm

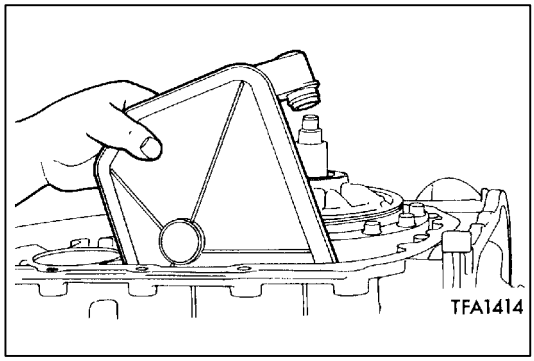

(55) Install the oil filter.

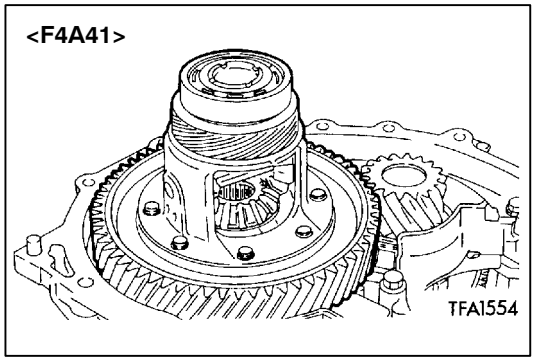

(56) Install the spacer (F4A41-1-MRA only), and then the differential. <F4A41>

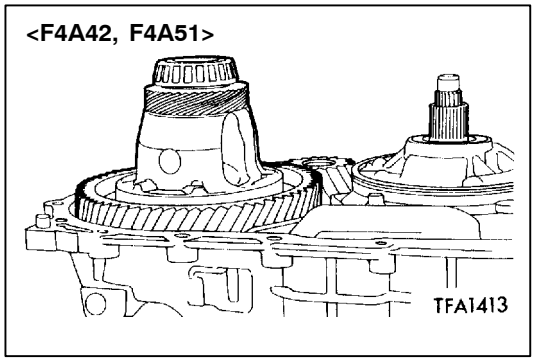

(57) Install the differential. <F4A42, F4A51>

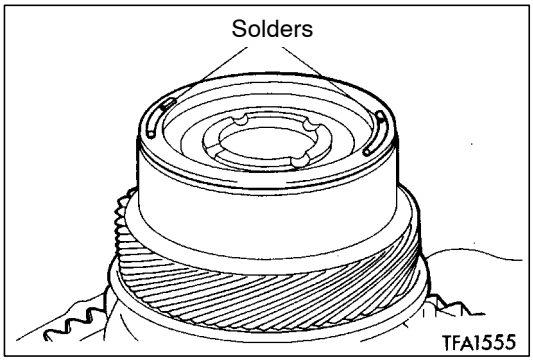

(58) Install the 1.25-mm-thick spacer. <F4A41-1-MRA only>
(59) Place a solder (approx. 10 mm in length, 3 mm in diameter) on the differential as shown in the figure. <F4A41>

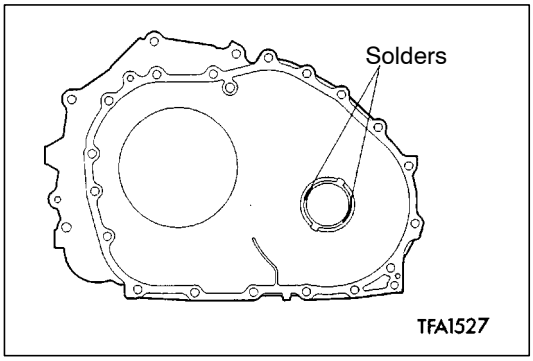

(60) Place a solder (approx. 10 mm in length, 3 mm in diameter) and outer race on the torque converter housing as shown in the figure. <F4A42, F4A51>

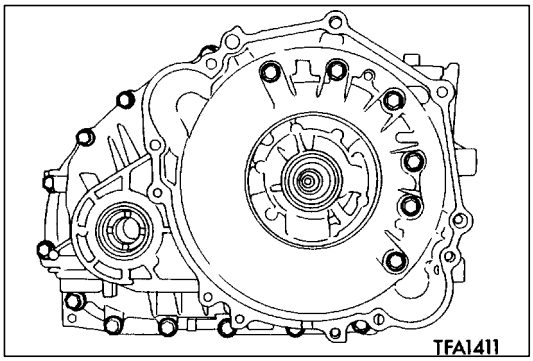

(61) Install the torque converter housing to the transmission case without applying sealant. Tighten its mounting bolts to the specified torque.
(62) Loosen the bolts, and remove the outer race <F4A42, F4A51> and solder.

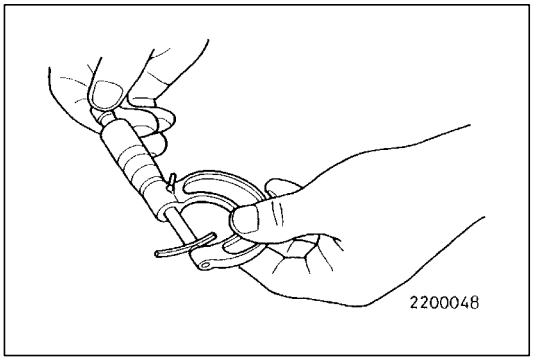

(63) Use a micrometer to measure the thickness (T) of the pressed solder. Select a spacer which thickness is within the following value.

F4A41
(T - 0.045 mm) to (T - 0.165 mm)

F4A42, F4A51
(T + 0.045 mm) to (T + 0.105 mm)

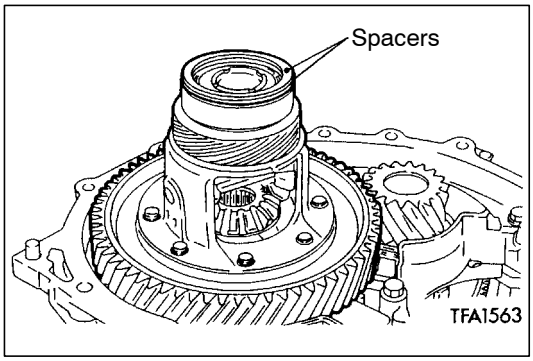

(64) Place the spacer selected in the above step. <F4A41>

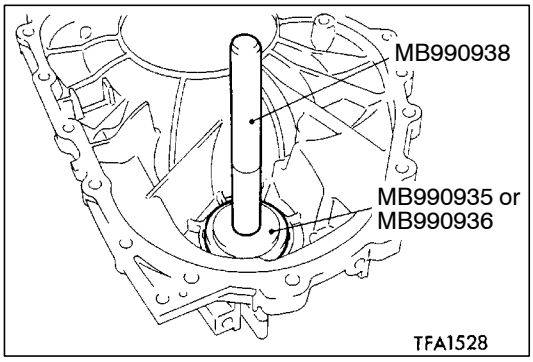

(65) Set the spacer selected in step (63) and install the outer race to the torque converter housing. Use the special tools to press in the outer race. <F4A42, F4A51>

Model	Special tools No.
F4A42	MB990935, MB990938
F4A51	MB990936, MB990938

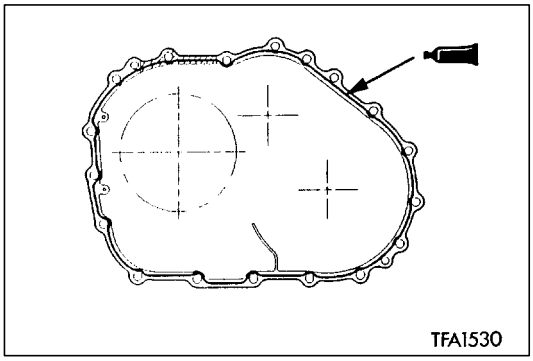

(66) Squeeze out the liquid gasket of 1.6 mm in diameter and apply it to the shown points of torque converter.

Liquid gasket:
MITSUBISHI genuine sealant Part No. MD974421 or equivalent

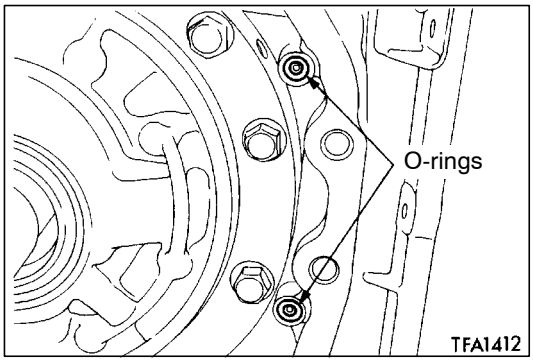

(67) Install the two O-rings.

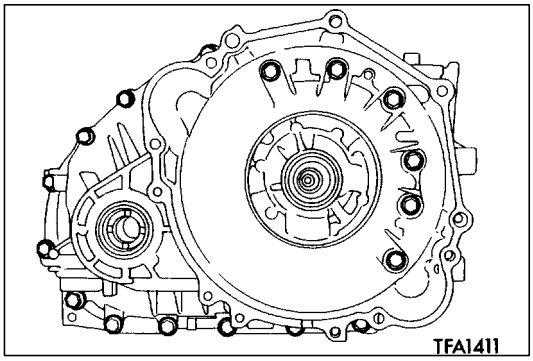

(68) Install the torque converter, and then tighten its 18 mounting bolts to the specified torque.

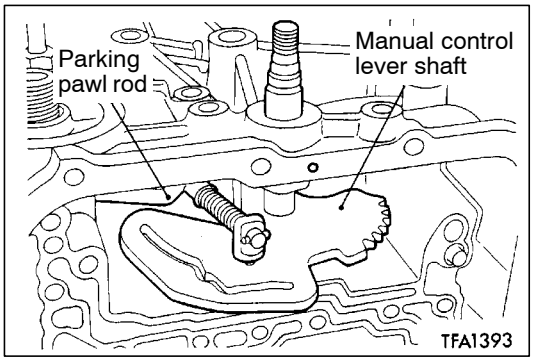

(69) Install the manual control lever shaft and parking pawl rod.
(70) Install the manual control lever shaft roller.

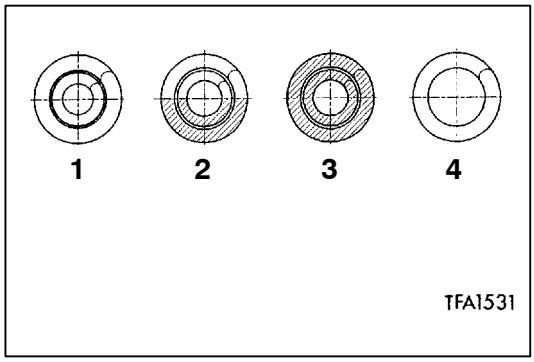

(71) Install the accumulator pistons, new seal rings, and springs.

NOTE
The accumulator springs are identified as shown in the figure.

No.	Name
1	For low-reverse brake
2	For underdrive clutch
3	For second brake
4	For overdrive clutch

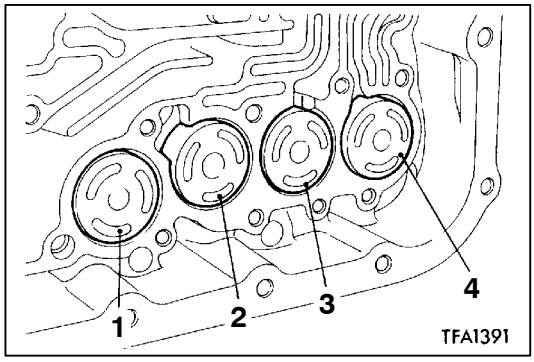

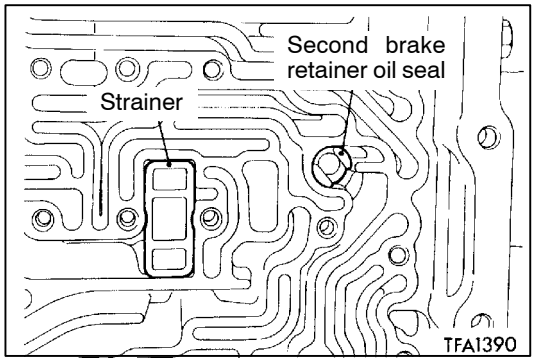

(72) Install the strainer and second brake retainer oil seal.

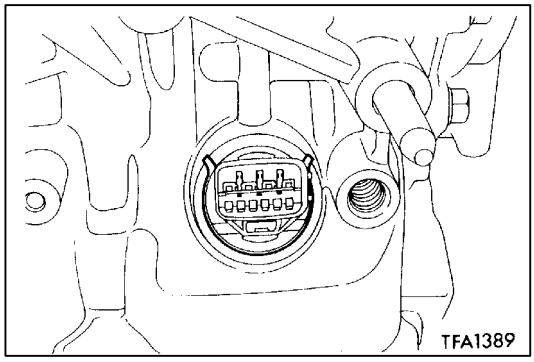

(73) Install the solenoid valve harness, and then secure the snap ring to the connector groove.

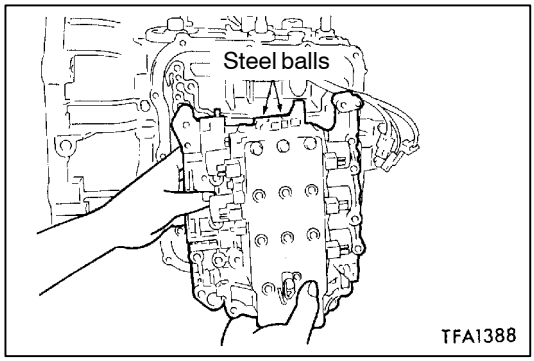

(74) Install the valve body, gasket, and two steel balls.

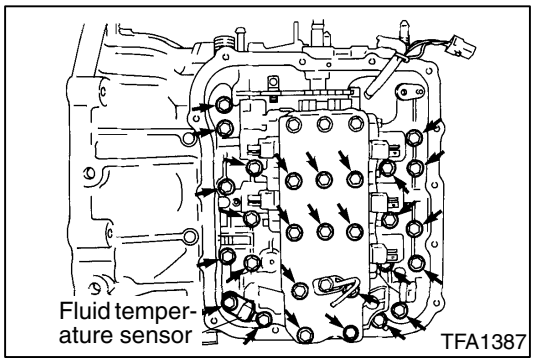

(75) Install the fluid temperature sensor. (This step is unnecessary if the sensor is incorporated in the solenoid valve harness).
(76) Install the 28 mounting bolts of the valve body.

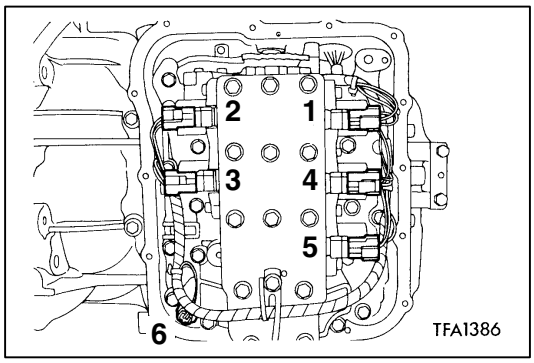

(77) Attach the solenoid valve harness to the valve body by connecting the fluid temperature sensor (only in the harness that incorporates the sensor) and all the connectors.

No.	Parts to be connected	Cable colour	Connector housing colour
1	Underdrive solenoid valve	White, red, red	Black
2	Overdrive solenoid valve	Orange, red	Black
3	Low-reverse solenoid valve	Brown, yellow	Milky white
4	Second solenoid valve	Green, red, red	Milky white
5	Damper clutch control solenoid valve	Blue, yellow, yellow	Black
6*	Fluid temperature sensor	Black, red	Black

*: Not applicable to type with solenoid valve harness incorporating fluid temperature sensor

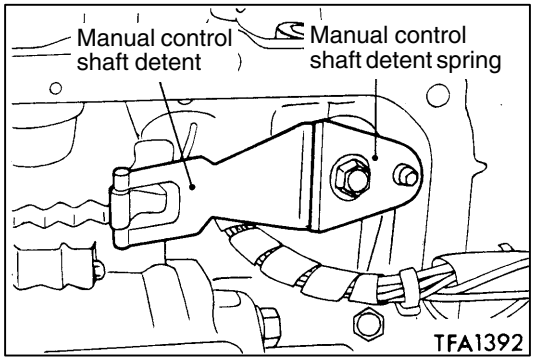

(78) Install the manual control shaft detent spring and detent. <Model 1996>

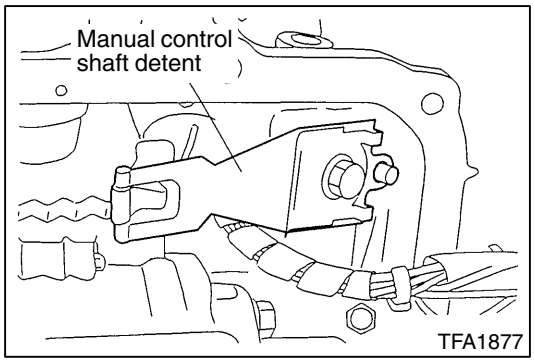

Install the manual control shaft detent. <from Model 1997>

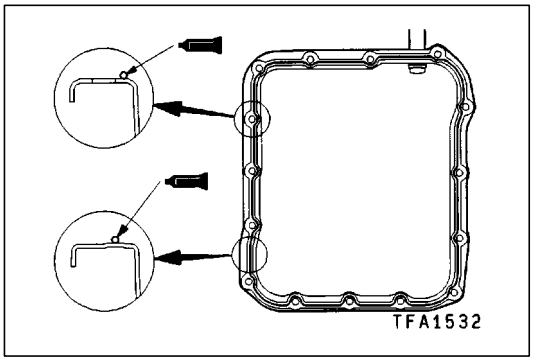

(79) Apply the liquid gasket to the valve body cover.

Liquid gasket:
MITSUBISHI genuine sealant Part No. MD974421 or equivalent

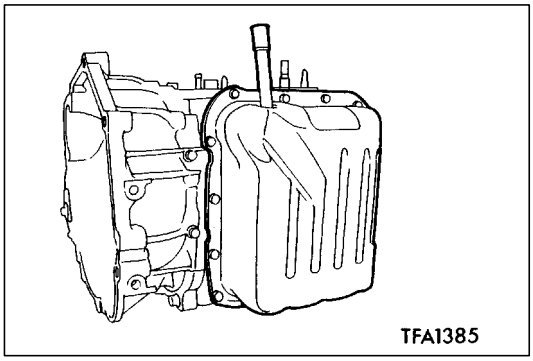

(80) Install the valve body cover, and then tighten its mounting bolts to the specified torque.

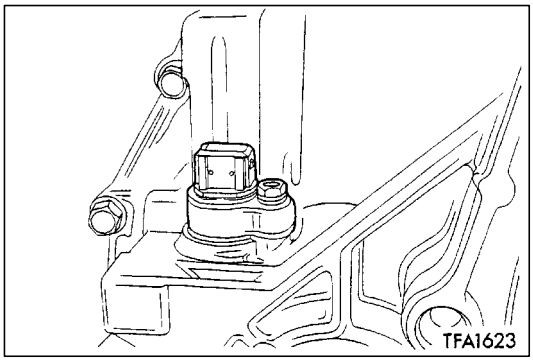

(81) Install the speedometer gear or sealing cap.

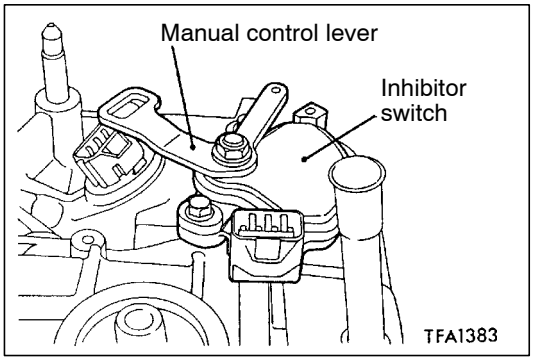

(82) Install the inhibitor switch and manual control lever.

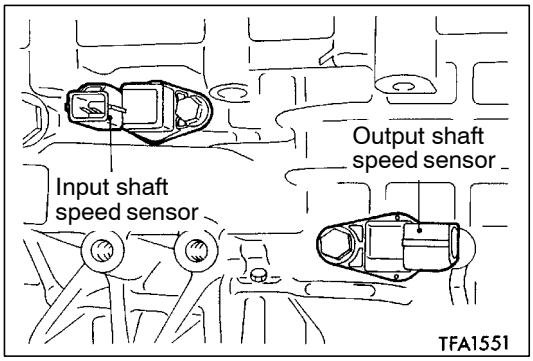

(83) Install the input shaft speed sensor and output shaft speed sensor.

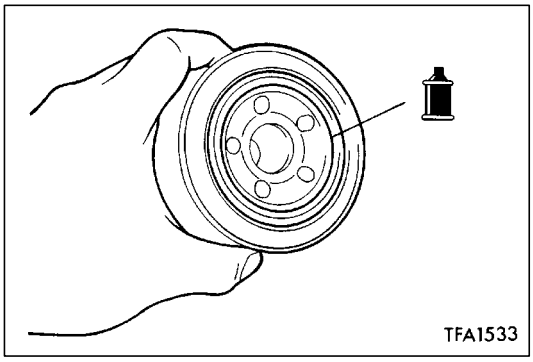

(84) Apply a small amount of ATF to the oil filter gasket. Tighten the filter to the specified torque. <Externally mounted type>

(85) Install the eye bolt, a new gasket, and the oil cooler feed tube.
(86) Install the oil dipstick.
(87) Install the brackets.

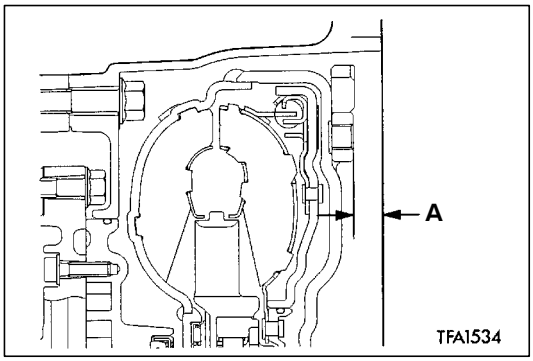

(88) Install the torque converter, and secure it so that the shown dimension (A) meets the reference value.

Reference value: approx.12.2 mm <F4A41, F4A42>
approx. 9.4 mm <F4A51>

Caution
Apply ATF to the oil pump drive hub before installing the torque converter. Be careful not to damage the oil seal lip when installing the torque converter.

4. OIL PUMP

DISASSEMBLY AND REASSEMBLY

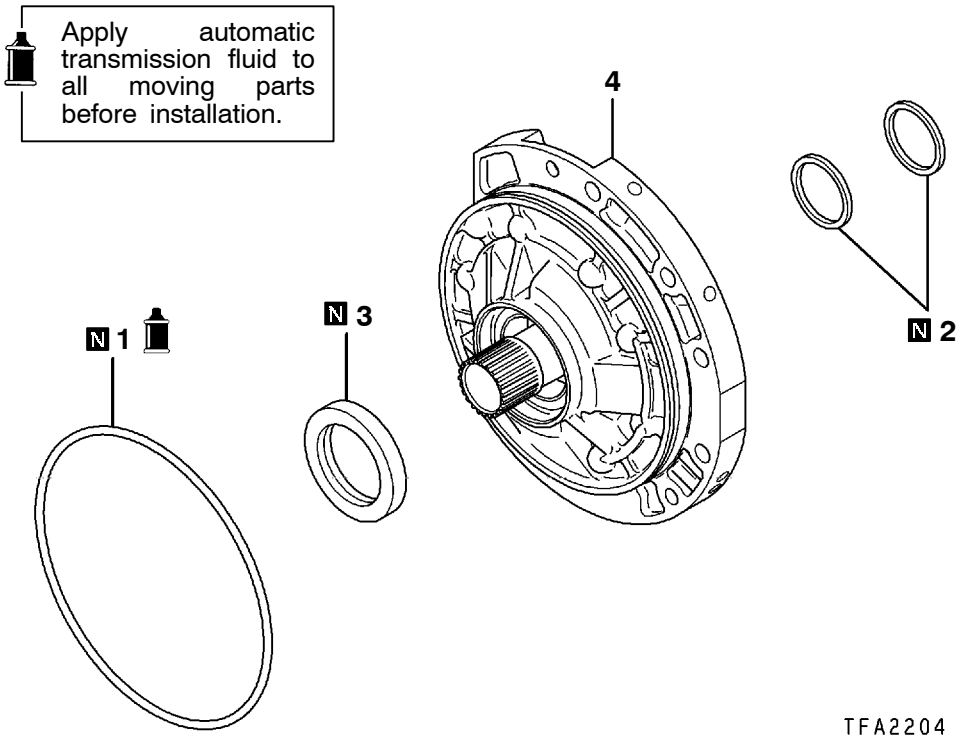

Disassembly steps

▶B◀ 1. O-ring
2. Seal ring
▶A◀ 3. Oil seal
4. Oil pump assembly

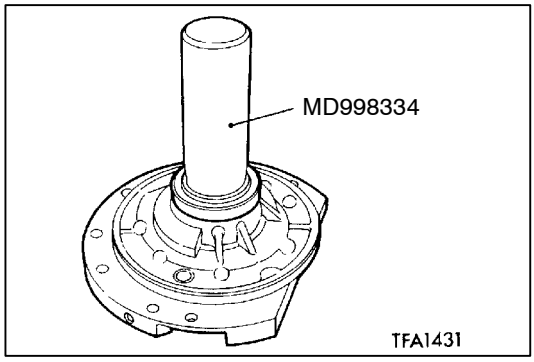

REASSEMBLY SERVICE POINTS

▶A◀ OIL SEAL INSTALLATION

▶B◀ O-RING INSTALLATION

Install a new O-ring to the outer groove of the oil pump, and apply ATF to the O-ring.

5. UNDERDRIVE CLUTCH AND INPUT SHAFT

23302090019

DISASSEMBLY AND REASSEMBLY

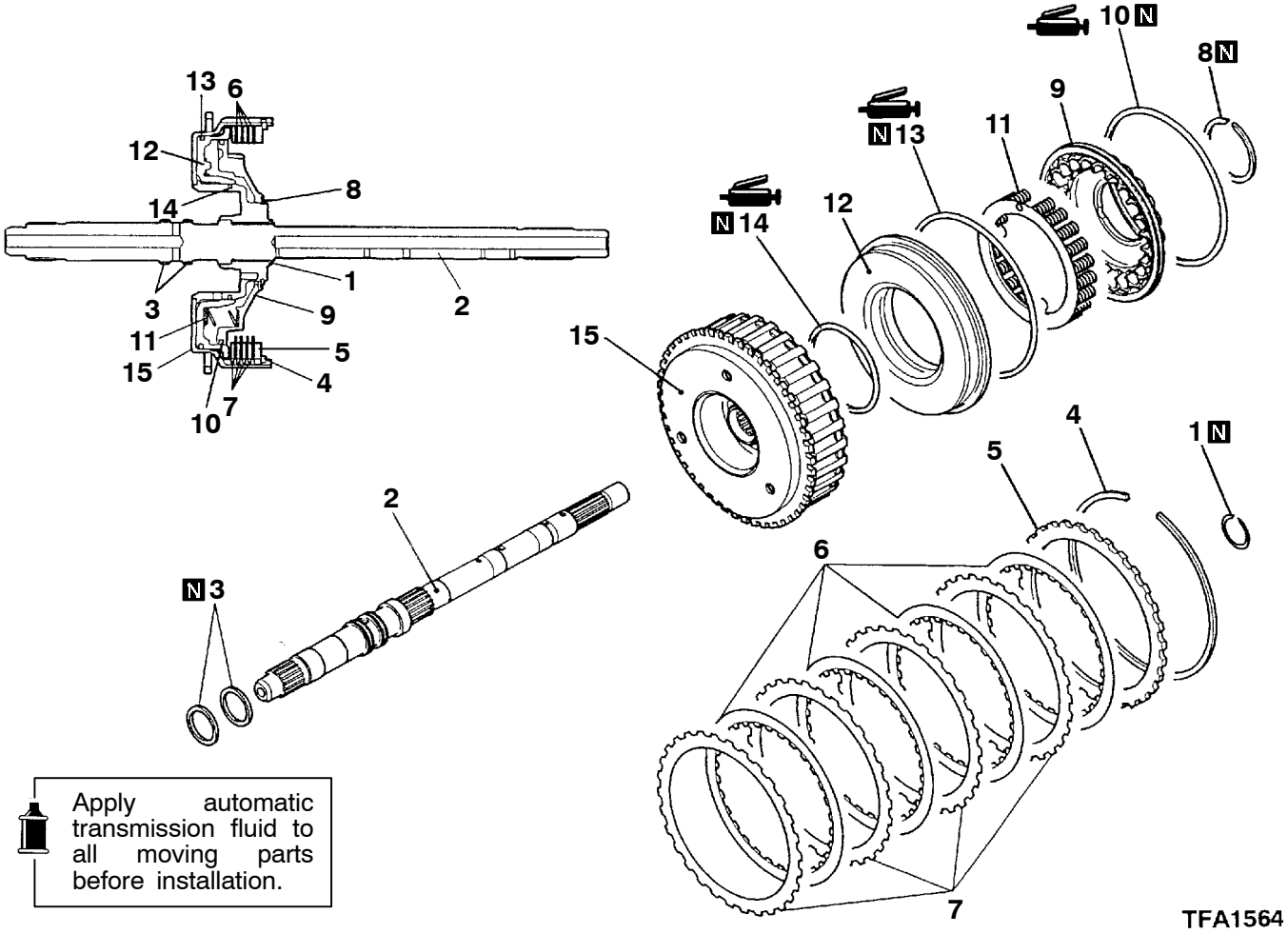

Apply automatic transmission fluid to all moving parts before installation.

Number of clutch discs and plates

Model	Clutch disc	Clutch plate	Clutch reaction plate
F4A41	3	3	1
F4A42, F4A51	4	4	1

Disassembly steps

1. Snap ring
2. Input shaft
3. Seal ring
4. ▶D◀ Snap ring
5. ▶C◀ Clutch reaction plate
6. ▶C◀ Clutch disc
7. ▶C◀ Clutch plate
8. ◀A▶ ▶B◀ Snap ring
9. Spring retainer
10. ▶A◀ D-ring
11. Return spring
12. Underdrive clutch piston
13. ▶A◀ D-ring
14. ▶A◀ D-ring
15. Underdrive clutch retainer

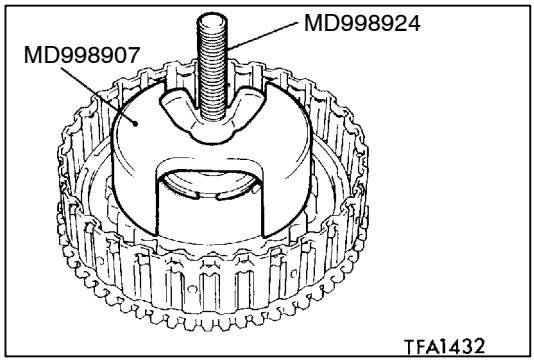

DISASSEMBLY SERVICE POINTS

◀A▶ SNAP RING REMOVAL

REASSEMBLY SERVICE POINTS

▶A◀ D-RING INSTALLATION

Apply ATF, blue petrolatum jelly or white Vaseline to D-ring, and install carefully.

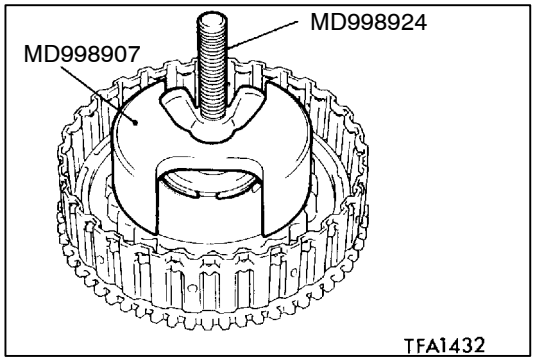

▶B◀ SNAP RING INSTALLATION

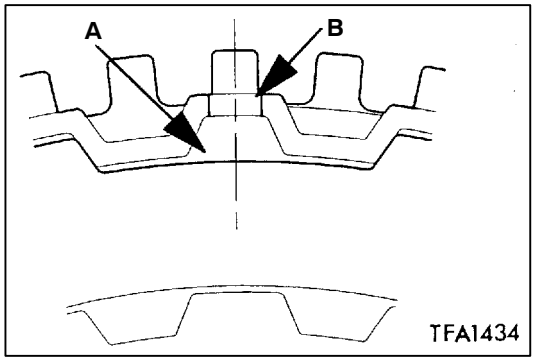

▶C◀ CLUTCH PLATE/CLUTCH DISC/CLUTCH REACTION PLATE INSTALLATION

(1) Align each teeth missing part (part A) of the clutch plate, clutch disc and clutch reaction plate to the outer circumference hole (part B) of the underdrive clutch retainer.

Caution
Immerse the clutch disc in ATF before assembling it.

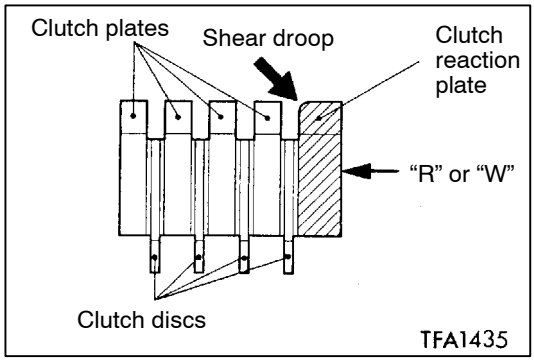

(2) Install the clutch reaction plate in the shown direction.

Number of clutch discs and plates

Model	Clutch disc	Clutch plate	Clutch reaction plate
F4A41	3	3	1
F4A42, F4A51	4	4	1

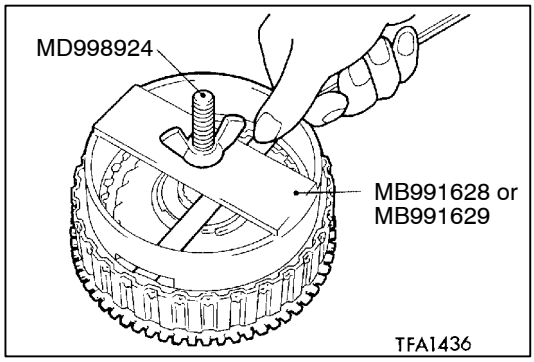

▶D◀ SNAP RING INSTALLATION

Check that the clearance between the snap ring and the clutch reaction plate is within the standard value. When measuring the clearance, use the special tool to press the clutch reaction plate evenly. If not within the standard value, select a snap ring to adjust.

Standard value:

1.2 - 1.4 mm <F4A41>
1.6 - 1.8 mm <F4A42, F4A51>

Model	Special tools No.
F4A41, F4A42	MB991628, MD998924
F4A51	MB991629, MD998924

6. REVERSE AND OVERDRIVE CLUTCH

DISASSEMBLY AND REASSEMBLY

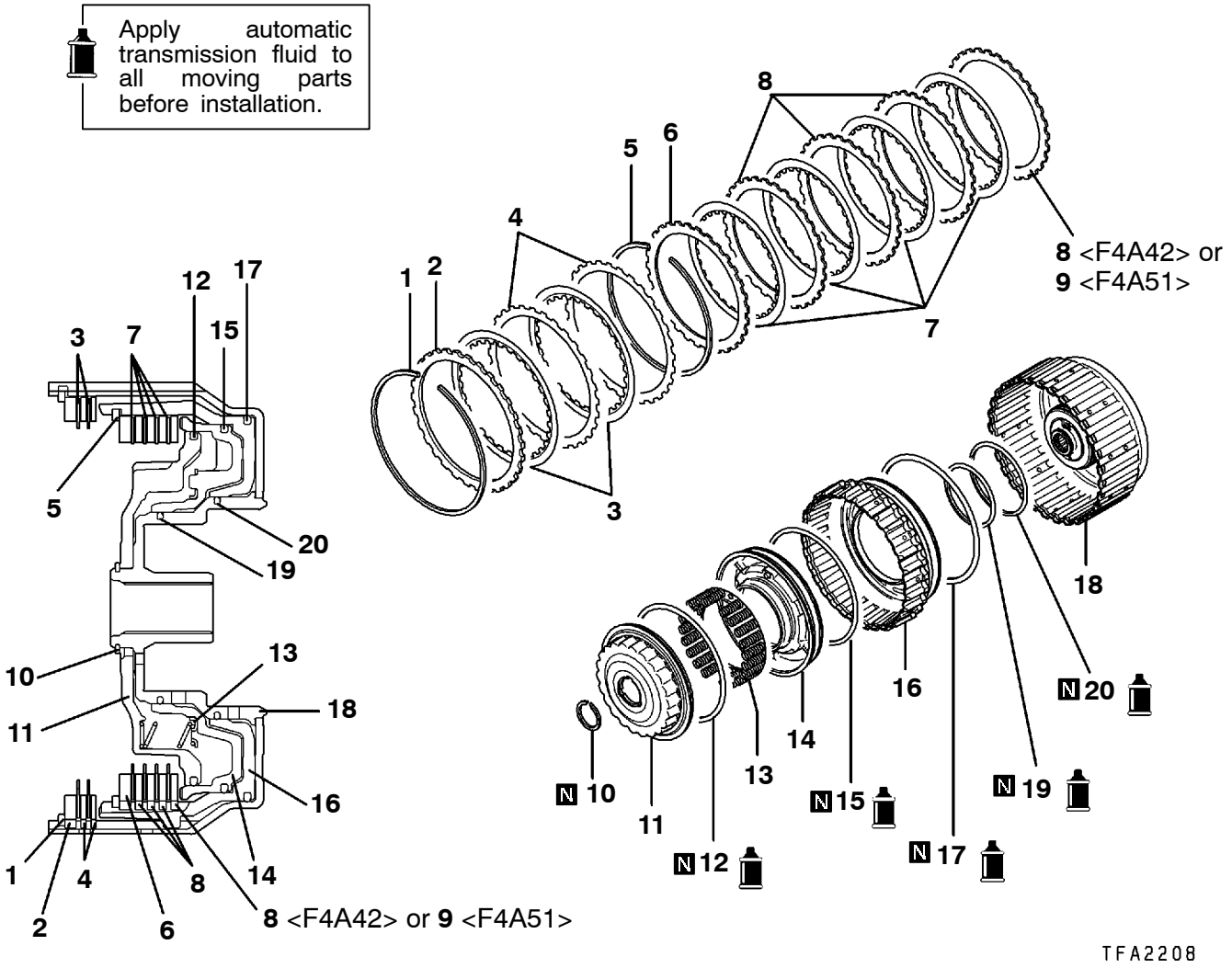

Number of clutch discs and plates

	Model	Pressure plate	Clutch disc	Clutch plate	Clutch reaction plate
Over-drive clutch	F4A41	-	3	3	1
	F4A42	-	4	4	1
	F4A51	1	4	3	1
Reverse clutch		-	2	2	1

Disassembly steps

- ▶G◀ 1. Snap ring
- ▶F◀ 2. Clutch reaction plate
- ▶F◀ 3. Clutch disc
- ▶F◀ 4. Clutch plate
- ▶E◀ 5. Snap ring
- ▶D◀ 6. Clutch reaction plate
- ▶D◀ 7. Clutch disc
- ▶D◀ 8. Clutch plate
- ▶D◀ 9. Pressure plate <F4A51>
- ◀A▶ ▶C◀ 10. Snap ring
- 11. Spring retainer
- ▶A◀ 12. D-ring
- 13. Return spring
- 14. Overdrive clutch piston
- ▶A◀ 15. D-ring
- ▶B◀ 16. Reverse clutch piston
- ▶A◀ 17. D-ring
- 18. Reverse clutch retainer
- ▶A◀ 19. D-ring
- ▶A◀ 20. D-ring

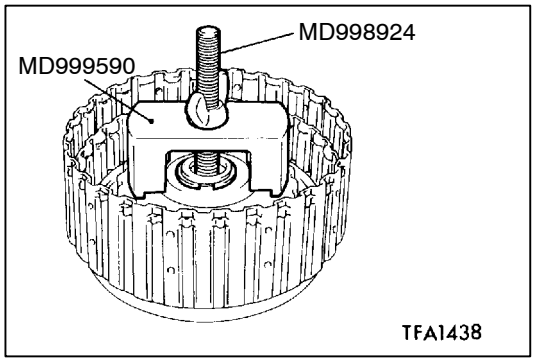

DISASSEMBLY SERVICE POINT

◀A▶ SNAP RING REMOVAL

REASSEMBLY SERVICE POINTS

▶A◀ D-RING INSTALLATION

Apply ATF, blue petrolatum jelly or white Vaseline to D-ring, and install carefully.

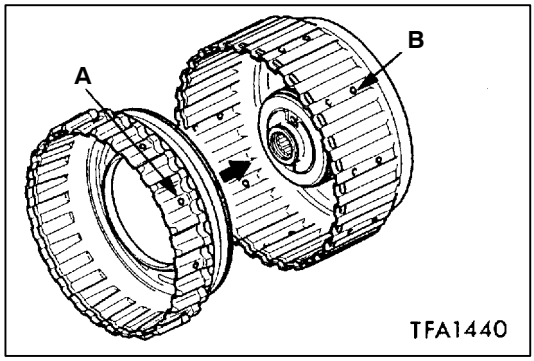

▶B◀ REVERSE CLUTCH PISTON INSTALLATION

Align the outer circumference holes (parts A and B) of the reverse clutch piston and the reverse clutch retainer to assemble them.

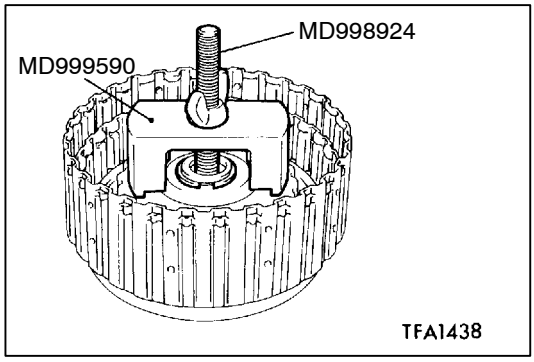

▶C◀ SNAP RING INSTALLATION

(1) Set special tools as shown in the illustration.
(2) Tighten the nut on the special tool to press down on the spring retainer and reverse clutch retainer, and then install the snap ring.
(3) Check that the clearance between the snap ring and the return spring retainer is within the standard value. If not within the standard value, select a snap ring to adjust.

Standard value: 0-0.09 mm

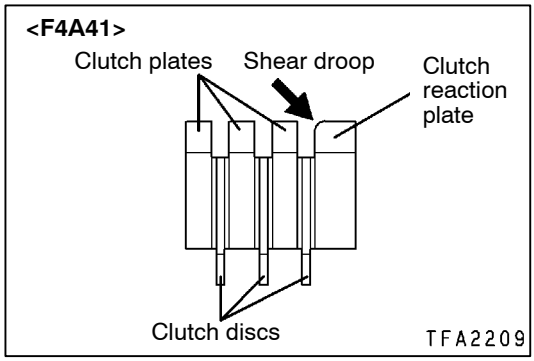

▶D◀ PRESSURE PLATE / CLUTCH PLATE / CLUTCH DISC / CLUTCH REACTION PLATE INSTALLATION

Install the clutch reaction plate in the shown direction.

Caution
Immerse the clutch disc in ATF before assembling the clutch disc.

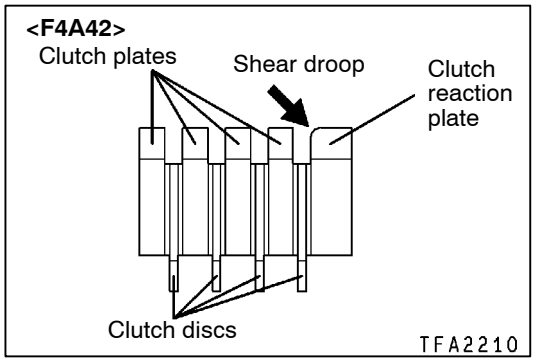

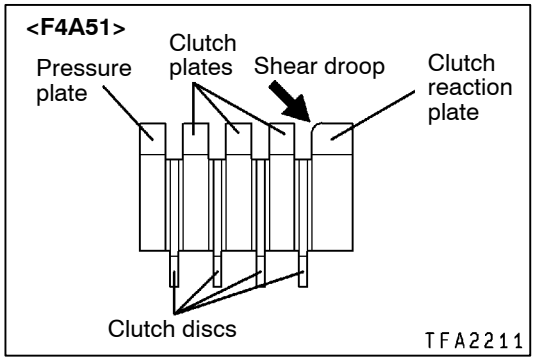

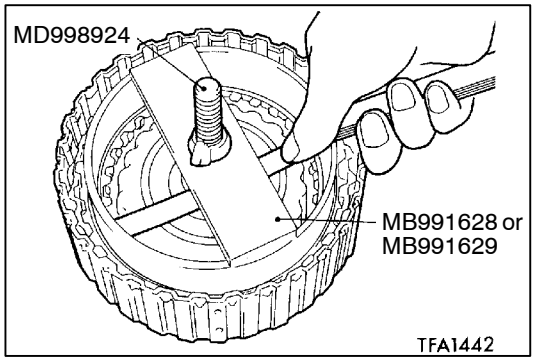

▶E◀ SNAP RING INSTALLATION

Check that the clearance between the snap ring and the clutch reaction plate is within the standard value. When measuring the clearance, use the special tool to press the clutch reaction plate evenly. If not within the standard value, select a snap ring to adjust.

Standard value:

1.2 - 1.4 mm <F4A41>
1.6 - 1.8 mm <F4A42, F4A51>

Model	Special tools No.
F4A41, F4A42	MB991628, MD998924
F4A51	MB991629, MD998924

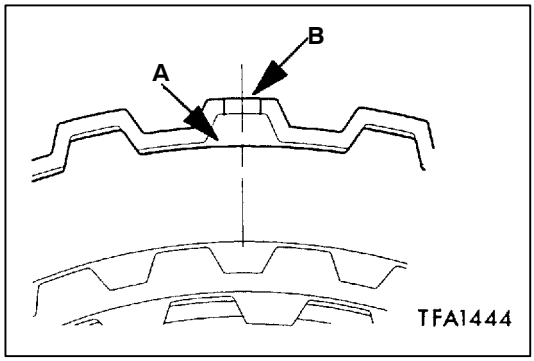

▶F◀ CLUTCH PLATE / CLUTCH DISC / CLUTCH REACTION PLATE INSTALLATION

(1) Align each teeth missing part (part A) of the clutch plate, clutch disc and clutch reaction plate to the outer circumference hole (part B) of the reverse clutch retainer.

Caution
Immerse the clutch disc in ATF.

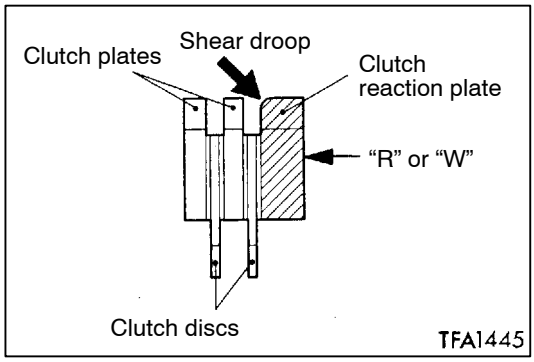

(2) Install the clutch reaction plate in the shown direction.

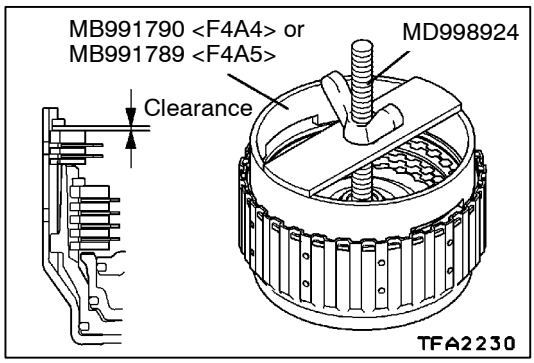

▶G◀SNAP RING INSTALLATION

(1) Install the snap ring into the groove of reverse clutch retainer.
(2) Set special tools MB991790 <F4A4> or MB991789 <F4A5> and MD998924 as shown in the illustration, and compress the clutch element.
(3) Check that the clearance between the snap ring and the clutch reaction plate is within the standard value. If not within the standard value, select a snap ring to adjust.

Standard value: 1.5 - 1.7 mm

7. OVERDRIVE PLANETARY CARRIER <F4A41, F4A42 without ONE-WAY CLUTCH>

DISASSEMBLY AND REASSEMBLY

Apply automatic transmission fluid to all moving parts before installation.

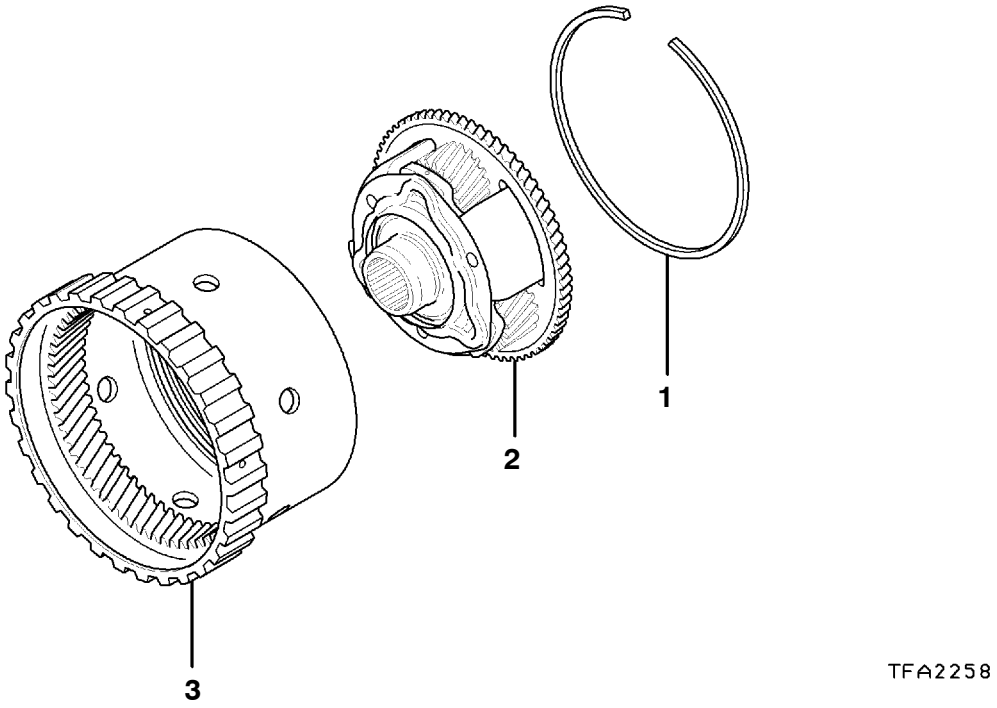

Disassembly steps

1. Snap ring
2. Overdrive planetary carrier
3. Overdrive annulus gear

7a. PLANETARY CARRIER ASSEMBLY <F4A42 with ONE-WAY CLUTCH, F4A51>

DISASSEMBLY AND REASSEMBLY

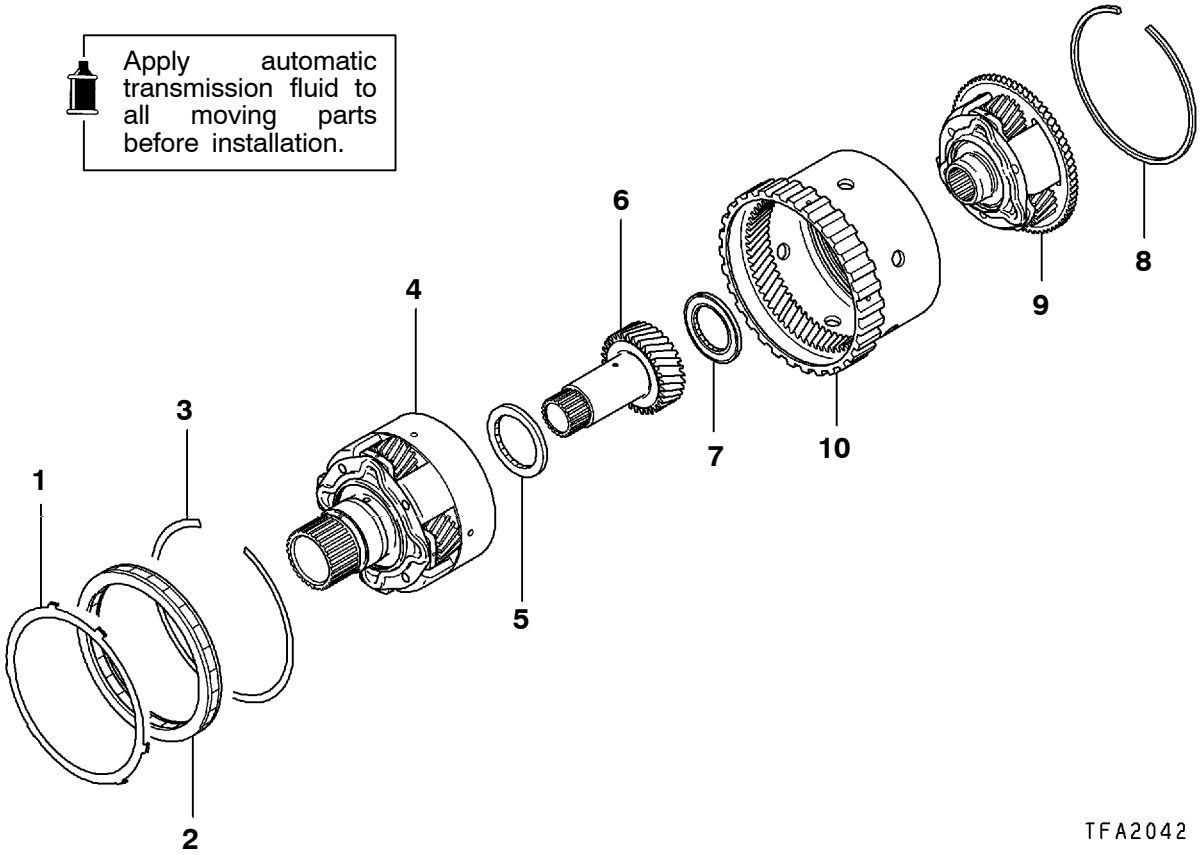

Disassembly steps

1. Stopper plate
▶B◀ 2. One-way clutch
3. Snap ring
4. Output planetary carrier
▶A◀ 5. Thrust bearing #3
6. Underdrive sun gear
▶A◀ 7. Thrust bearing #4
8. Snap ring
9. Overdrive planetary carrier
10. Overdrive annulus gear

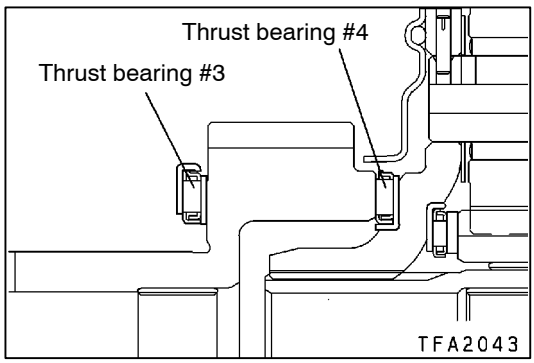

REASSEMBLY SERVICE POINTS

▶A◀ THRUST BEARING #3 / THRUST BEARING #4 INSTALLATION

Check the installation direction of thrust bearings number 3 and 4, and install them as shown.

Caution
Be careful about the installation direction of the thrust bearings.

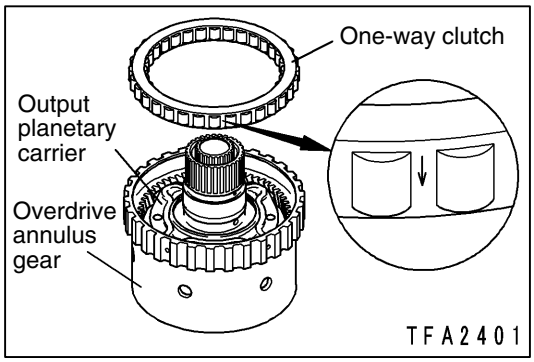

▶B◀ ONE-WAY CLUTCH INSTALLATION

Insert the one-way clutch into the overdrive annulus gear so that the arrow points to the output planetary carrier side.

8. LOW-REVERSE BRAKE

23300370047

DISASSEMBLY AND REASSEMBLY

Lubricate all internal parts with automatic transmission fluid during reassembly.

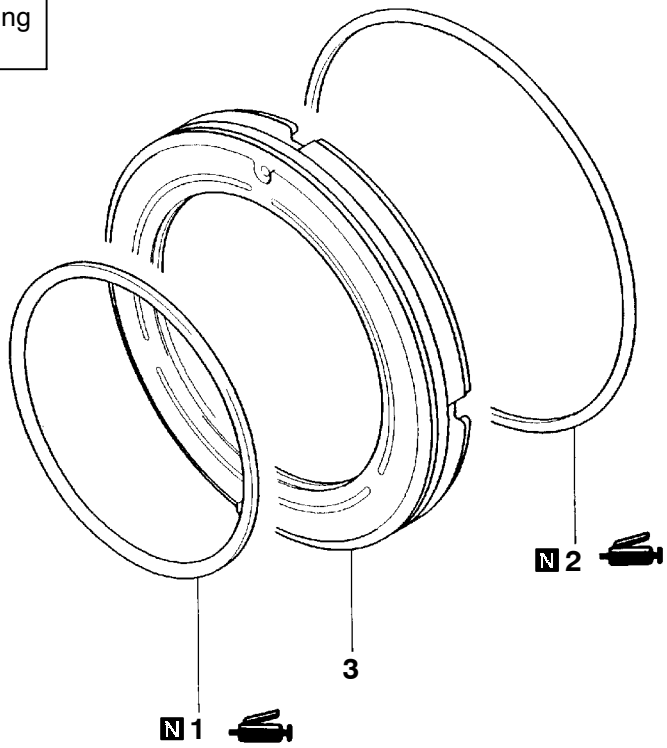

TFA1373

Disassembly steps

▶A◀ 1. D-ring
▶A◀ 2. D-ring
3. Low-reverse brake piston

REASSEMBLY SERVICE POINT

▶A◀ D-RING INSTALLATION

Apply ATF, blue petrolatum jelly or white Vaseline to D-ring, and install carefully.

9. SECOND BRAKE

23302180013

DISASSEMBLY AND REASSEMBLY

Lubricate all internal parts with automatic transmission fluid during reassembly.

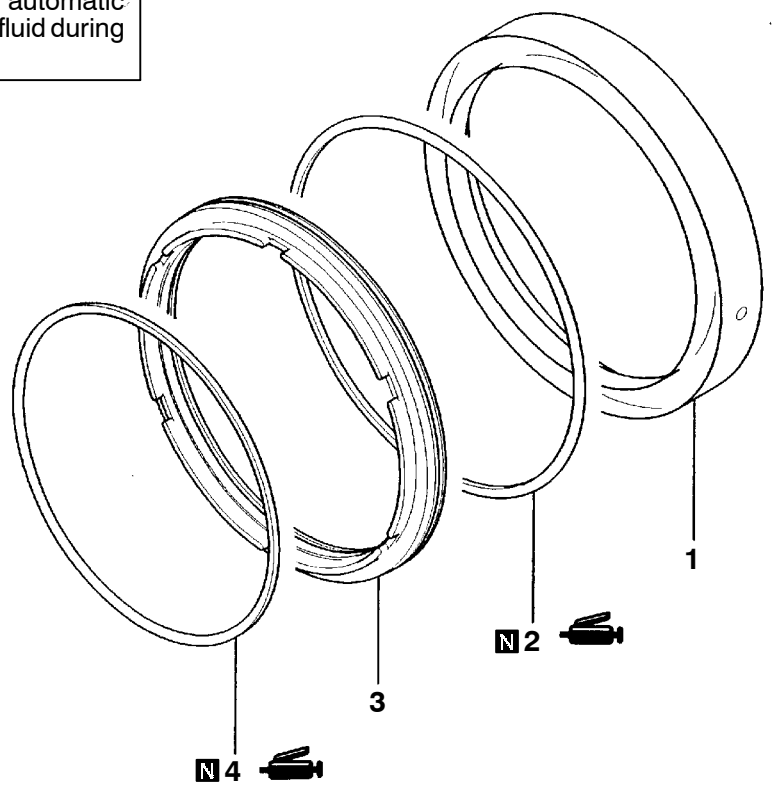

TFA1374

Disassembly steps

▶A◀ 1. Second brake retainer
2. D-ring
3. Second brake piston
▶A◀ 4. D-ring

REASSEMBLY SERVICE POINT

▶A◀ D-RING INSTALLATION

Apply ATF, blue petrolatum jelly or white Vaseline to D-ring, and install carefully.

10. OUTPUT SHAFT

23302210019

DISASSEMBLY AND REASSEMBLY

Lubricate all internal parts with automatic transmission fluid during reassembly.

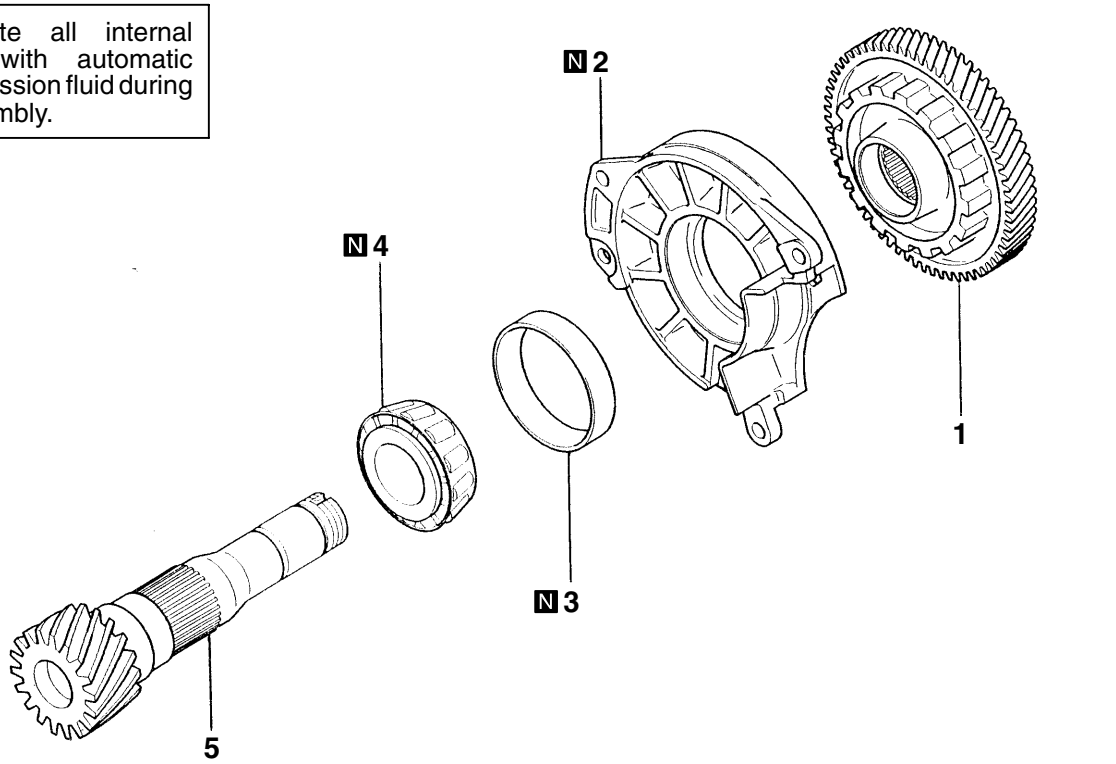

Disassembly steps

◀A▶ ▶C◀ 1. Transfer driven gear
2. Bearing retainer
▶B◀ 3. Outer race
◀B▶ ▶A◀ 4. Taper roller bearing
5. Output shaft

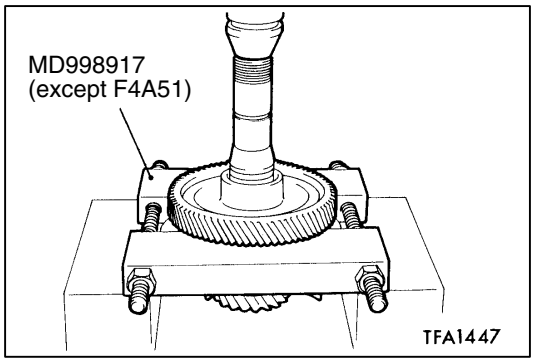

DISASSEMBLY SERVICE POINTS

◀A▶ TRANSFER DRIVEN GEAR REMOVAL

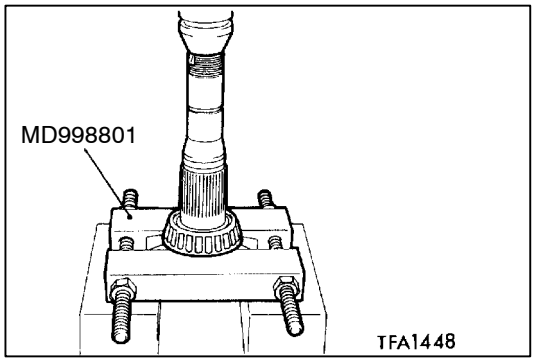

◀B▶ TAPER ROLLER BEARING REMOVAL

REASSEMBLY SERVICE POINTS

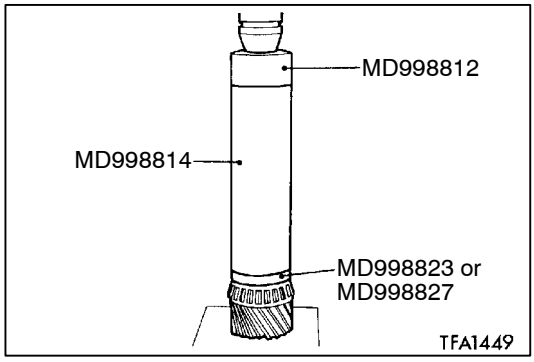

▶A◀ TAPER ROLLER BEARING INSTALLATION

Model	Special tools No.
F4A41, F4A42	MD998812, MD998814, MD998823
F4A51	MD998812, MD998814, MD998827

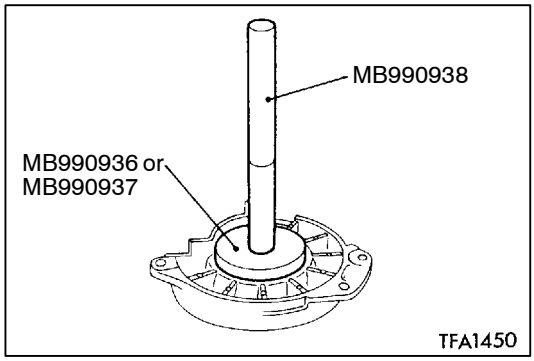

▶B◀ OUTER RACE INSTALLATION

Model	Special tools No.
F4A41, F4A42	MB990936, MB990938
F4A51	MB990937, MB990938

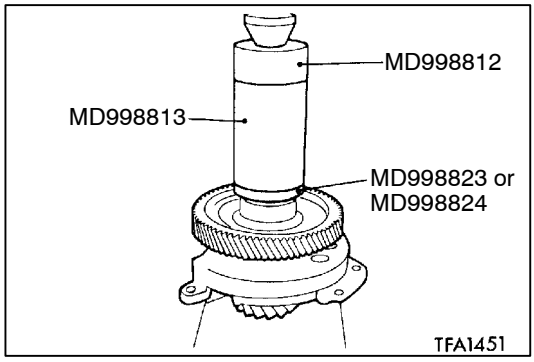

▶C◀ TRANSFER DRIVEN GEAR INSTALLATION

Model	Special tools No.
F4A41, F4A42	MD998812, MD998813, MB998823
F4A51	MD998812, MD998813, MB998824

11. TRANSFER DRIVE GEAR <F4A41 up to Dec. 1997, F4A42 up to Dec. 1997>

DISASSEMBLY AND REASSEMBLY

Apply automatic transmission fluid to all moving parts before installation.

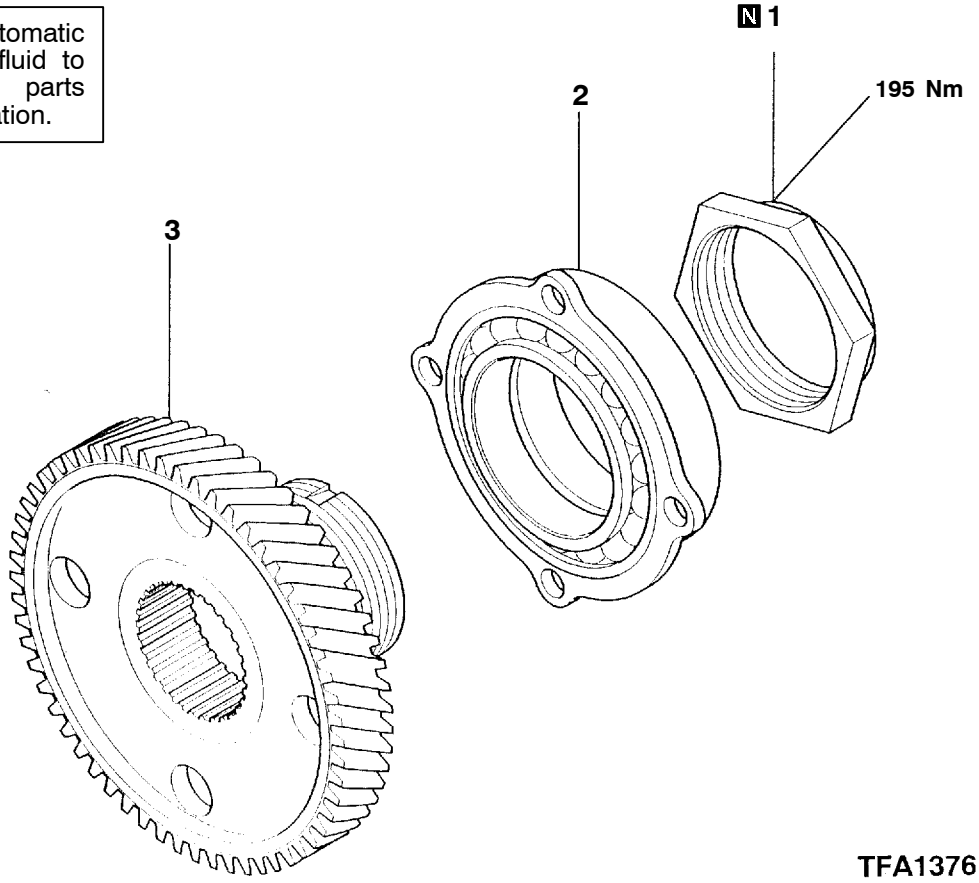

Disassembly steps

◀A▶ ▶B◀ 1. Lock nut
◀B▶ ▶A◀ 2. Transfer drive gear bearing
3. Transfer drive gear

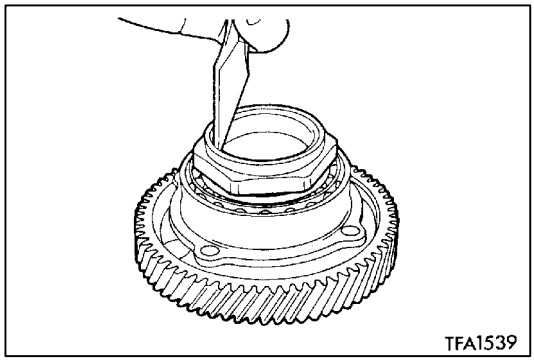

DISASSEMBLY SERVICE POINTS

◀A▶ LOCK NUT REMOVAL

(1) Pull up the turning stopper of the lock nut.

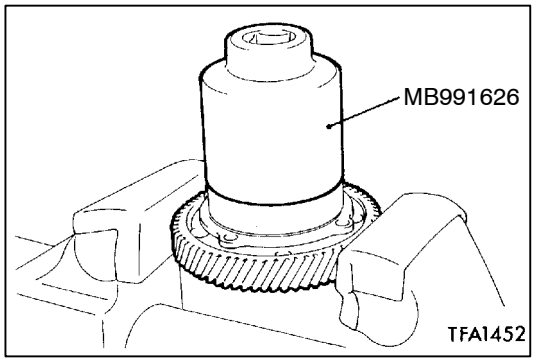

(2) Use the special tool to remove the lock nut.

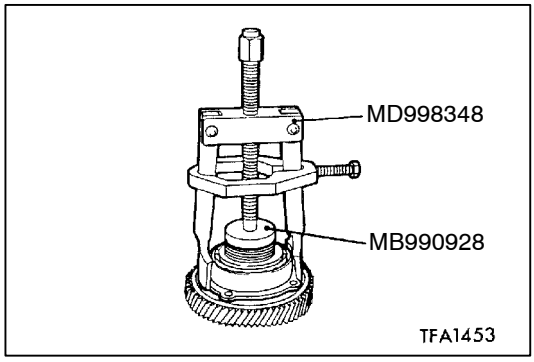

◀B▶ TRANSFER DRIVE GEAR BEARING REMOVAL

REASSEMBLY SERVICE POINTS

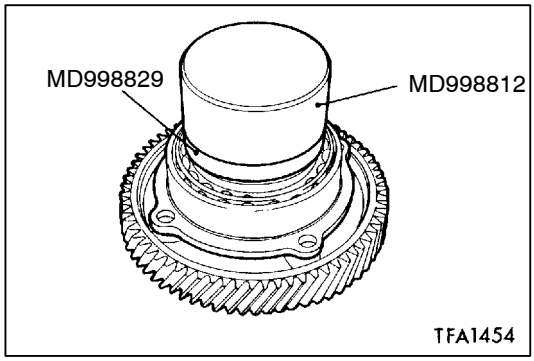

▶A◀ TRANSFER DRIVE GEAR BEARING INSTALLATION

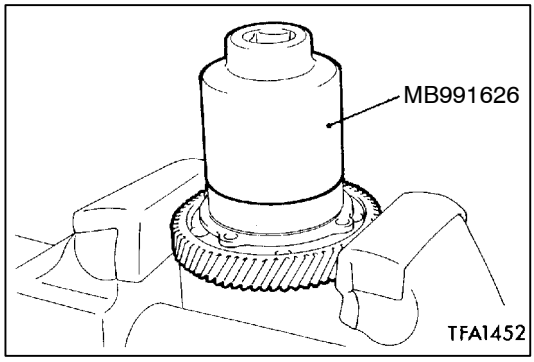

▶B◀ LOCK NUT INSTALLATION

(1) Apply ATF to a new lock nut, and tighten it to the specified torque. Then turn back one turn, and tighten to the specified torque again.

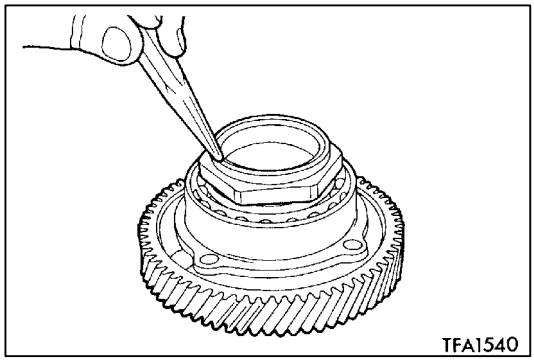

(2) Use a punch or other to prevent the nut from turning (two points).

12. DIFFERENTIAL

DISASSEMBLY AND REASSEMBLY

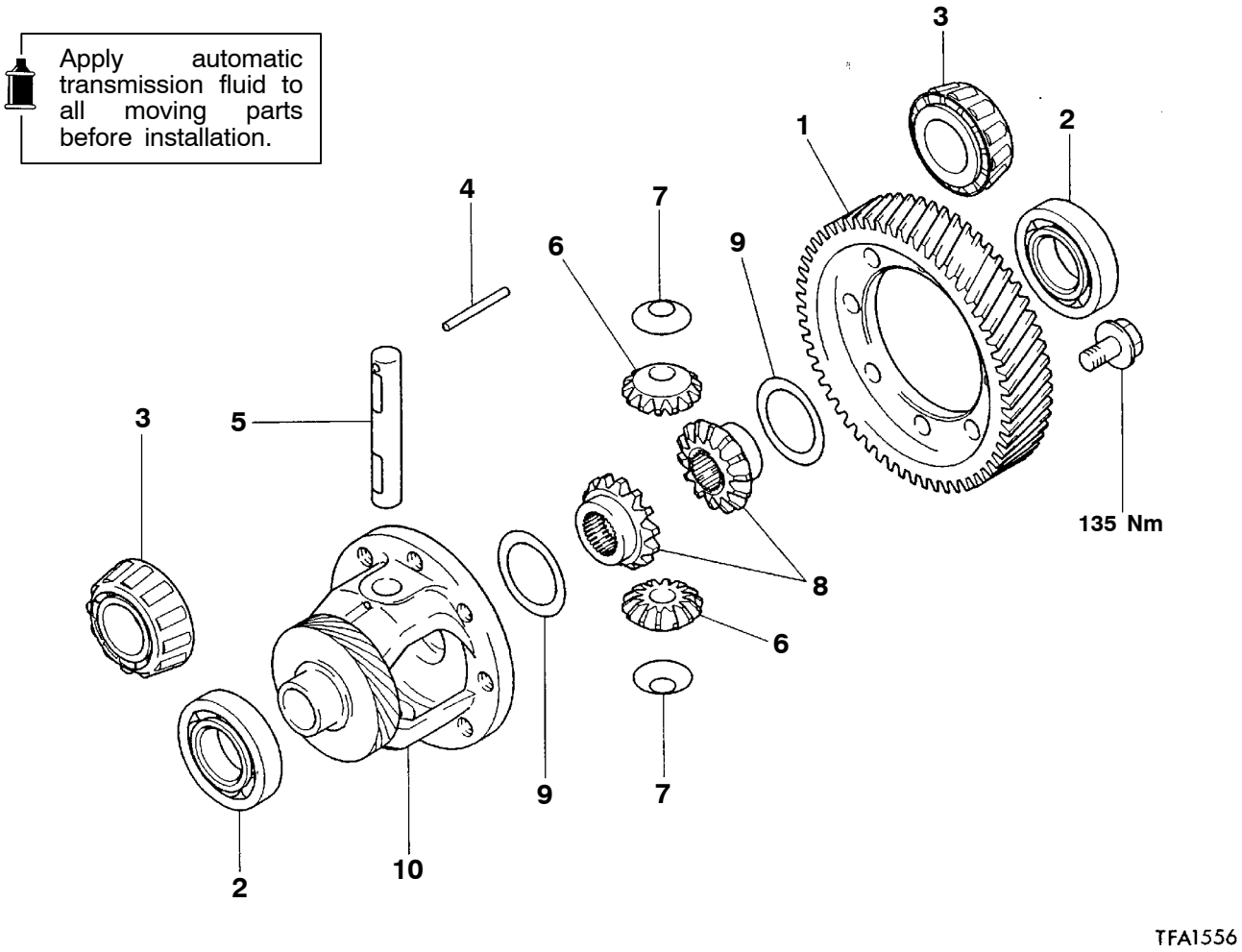

Disassembly steps

- ▶E◀ 1. Differential drive gear
- ◀A▶ ▶D◀ 2. Ball bearings <F4A41>
- ◀B▶ ▶C◀ 3. Taper roller bearings <F4A42, F4A51>
- ▶B◀ 4. Lock pin
- ▶A◀ 5. Pinion shaft
- ▶A◀ 6. Pinions
- ▶A◀ 7. Washers
- ▶A◀ 8. Side gears
- ▶A◀ 9. Spacers
- 10. Differential case

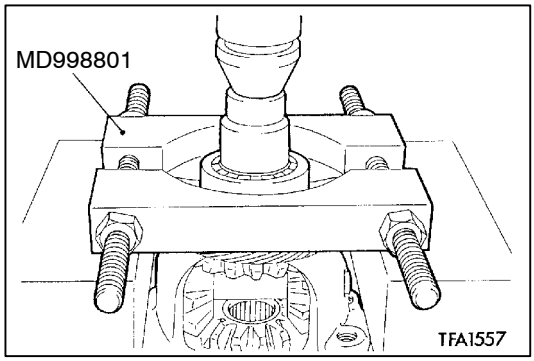

DISASSEMBLY SERVICE POINTS

◀A▶ BALL BEARING REMOVAL

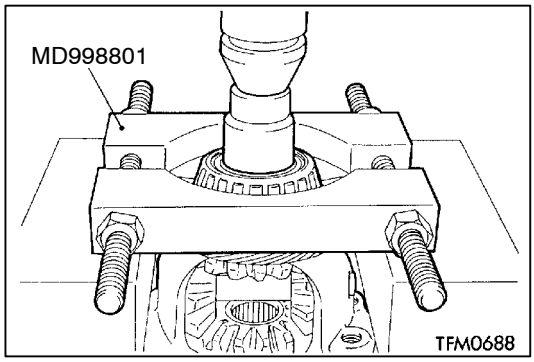

◀B▶ TAPER ROLLER BEARING REMOVAL

REASSEMBLY SERVICE POINTS

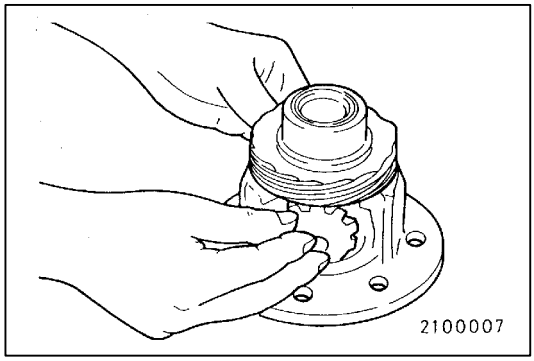

▶A◀ SPACER, SIDE GEAR, WASHER, PINION, PINION SHAFT INSTALLATION

(1) Install the spacers to the back side of the side gears, and then assemble the side gears into the differential case.

NOTE
Select the medium size spacer (0.93 - 1.00 mm) when assembling a new side gear.

(2) Attach the washers to the back side of the pinions, engage the pinions simultaneously to the side gears, and settle the gears by turning.

(3) Insert the pinion shaft.

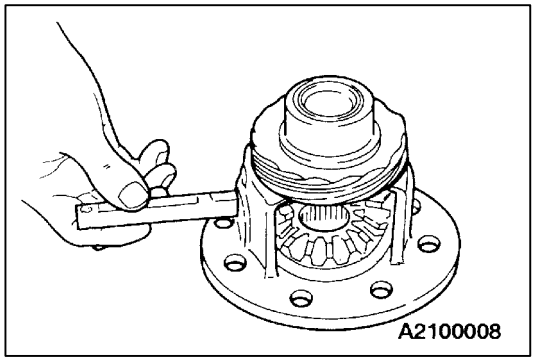

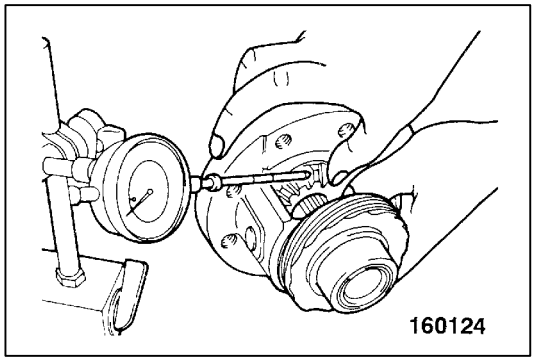

(4) Measure the backlash between the side gears and pinions.

Standard value: 0.025 - 0.150 mm

(5) If not within the standard value, change a spacer and measure the backlash again.

NOTE
Adjust so that both backlashes are equal.

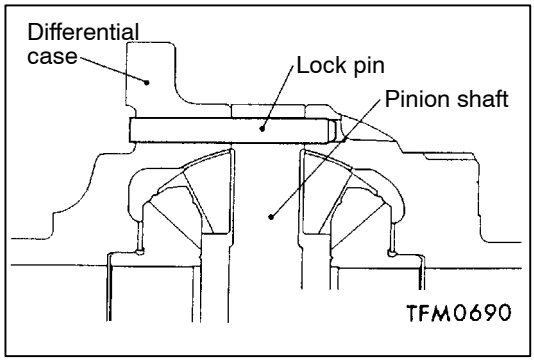

▶B◀ LOCK PIN INSTALLATION

Install the lock pin in the shown direction.

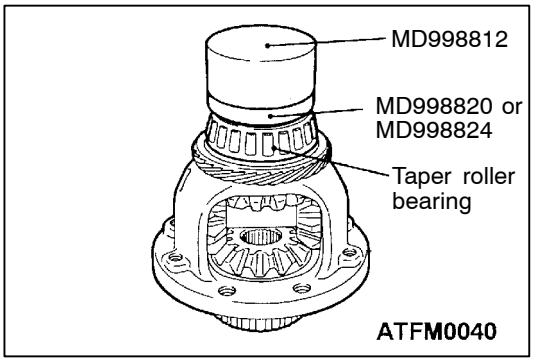

▶C◀ TAPER ROLLER BEARING INSTALLATION

Model	Special tools No.
F4A42	MD998812, MD998820
F4A51	MD998812, MD998824

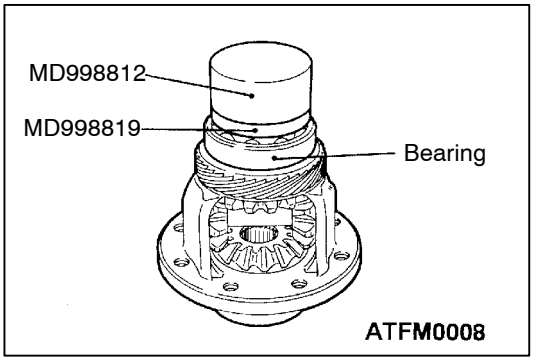

▶D◀ BALL BEARING INSTALLATION

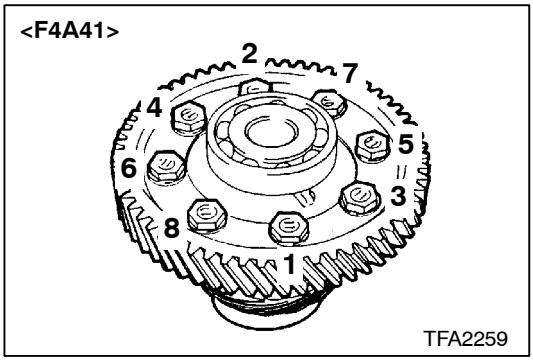

▶E◀ DIFFERENTIAL DRIVE GEAR INSTALLATION

Apply ATF to the bolt, tighten the bolts to the specified torque in the shown sequence.

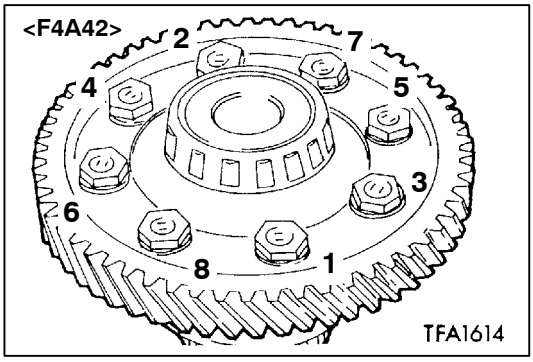

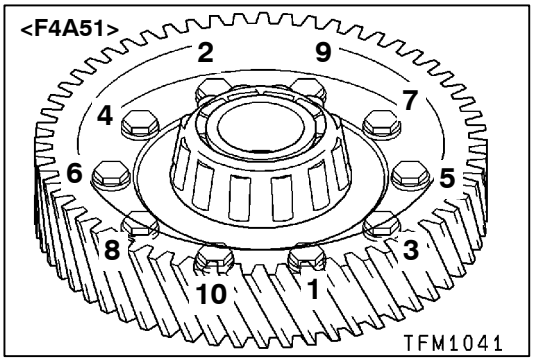

13. VALVE BODY

23300550045

DISASSEMBLY AND REASSEMBLY

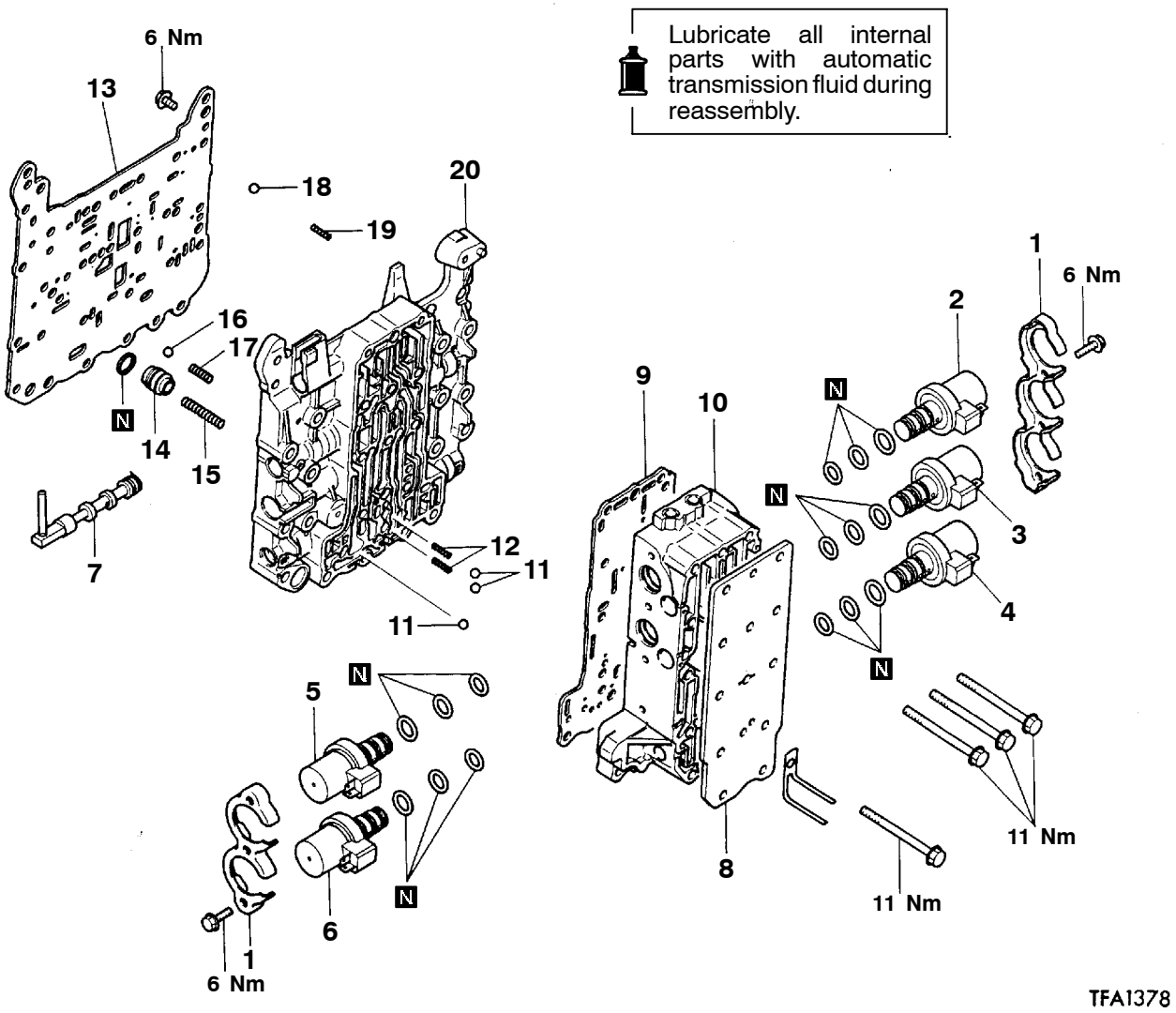

Disassembly steps

1. Solenoid valve support
◀A▶ ▶C◀ 2. Underdrive solenoid valve
◀A▶ ▶C◀ 3. Second solenoid valve
◀A▶ ▶C◀ 4. Damper clutch control solenoid valve
◀A▶ ▶C◀ 5. Overdrive solenoid valve
◀A▶ ▶C◀ 6. Low-reverse solenoid valve
7. Manual valve
8. Cover
9. Plate
10. Outside valve body assembly
▶B◀ 11. Steel ball (orifice check ball)
▶B◀ 12. Spring
13. Plate
▶A◀ 14. Damping valve
▶A◀ 15. Damping valve spring
▶A◀ 16. Steel ball (line relief)
▶A◀ 17. Spring
▶A◀ 18. Steel ball (orifice check ball)
▶A◀ 19. Spring
20. Inside valve body assembly

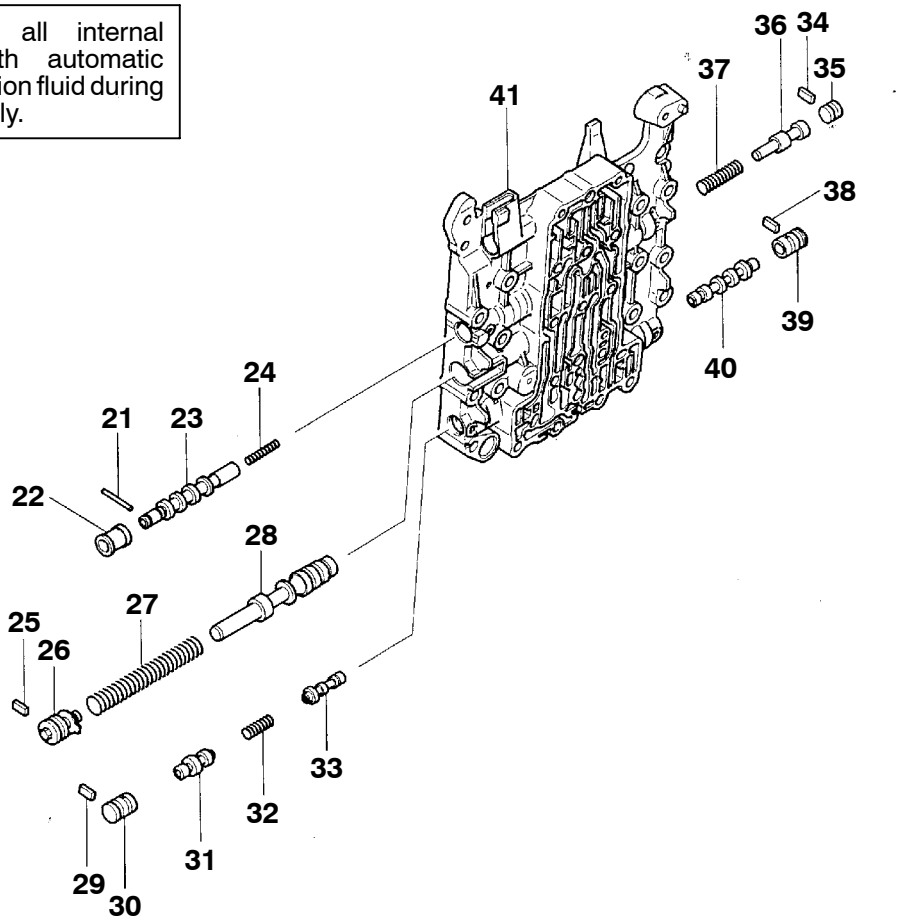

21. Roller
22. Damper clutch control valve sleeve
23. Damper clutch control valve
24. Damper clutch control valve spring
25. Plate
26. Screw
27. Regulator valve spring
28. Regulator valve
29. Plate
30. Fail-safe valve A sleeve
31. Fail-safe valve A2
32. Fail-safe valve A spring
33. Fail-safe valve A1
34. Plate
35. Plug
36. Torque converter valve
37. Torque converter valve spring
38. Plate
39. Fail-safe valve B sleeve
40. Fail-safe valve B
41. Inside valve body

Lubricate all internal parts with automatic transmission fluid during reassembly.

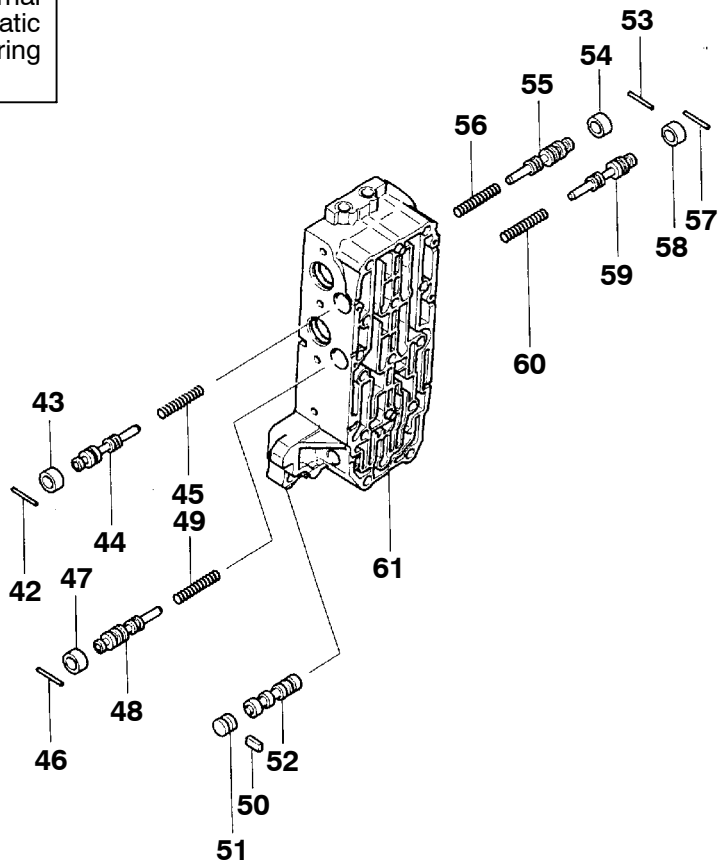

TFA1590

42. Roller
43. Overdrive pressure control valve sleeve
44. Overdrive pressure control valve
45. Overdrive pressure control valve spring
46. Roller
47. Low-reverse pressure control valve sleeve
48. Low-reverse pressure control valve
49. Low-reverse pressure control valve spring
50. Plate
51. Plug
52. Switching valve
53. Roller
54. Underdrive pressure control valve sleeve
55. Underdrive pressure control valve
56. Underdrive pressure control valve spring
57. Roller
58. Second pressure control valve sleeve
59. Second pressure control valve
60. Second pressure control valve spring
61. Outside valve body

DISASSEMBLY SERVICE POINT

◀A▶ SOLENOID VALVES REMOVAL

Mark solenoid valves by white paint to make reassembly easier.

REASSEMBLY SERVICE POINTS

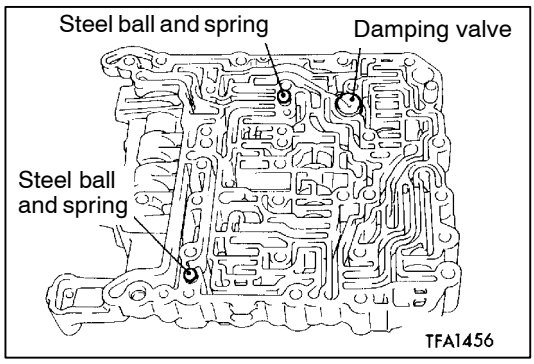

▶A◀ SPRING/STEEL BALL/DAMPING VALVE/DAMPING VALVE SPRING INSTALLATION

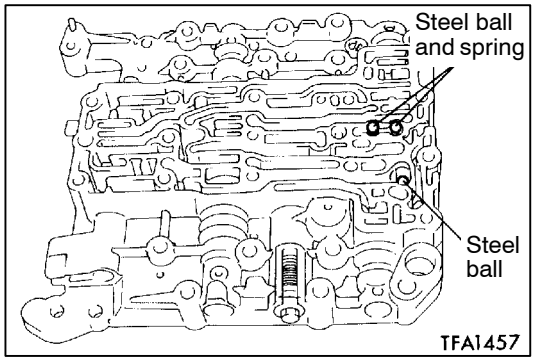

▶B◀ SPRING/STEEL BALL INSTALLATION

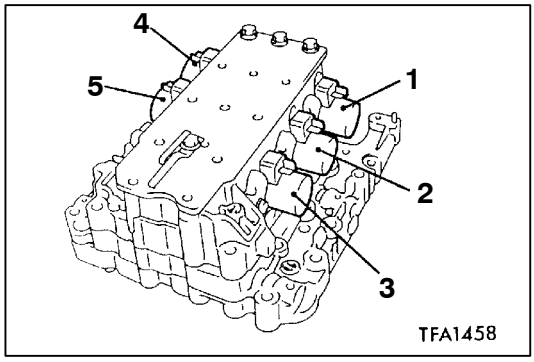

▶C◀ SOLENOID VALVES INSTALLATION

(1) Apply ATF, blue petrolatum jelly or white Vaseline to O-ring, and install carefully.
(2) Install the solenoid valves by referring to the marks during disassembly.

No.	Name
1	Underdrive solenoid valve
2	Second solenoid valve
3	Damper clutch control solenoid valve
4	Overdrive solenoid valve
5	Low-reverse solenoid valve

14. SPEEDOMETER GEAR

DISASSEMBLY AND REASSEMBLY

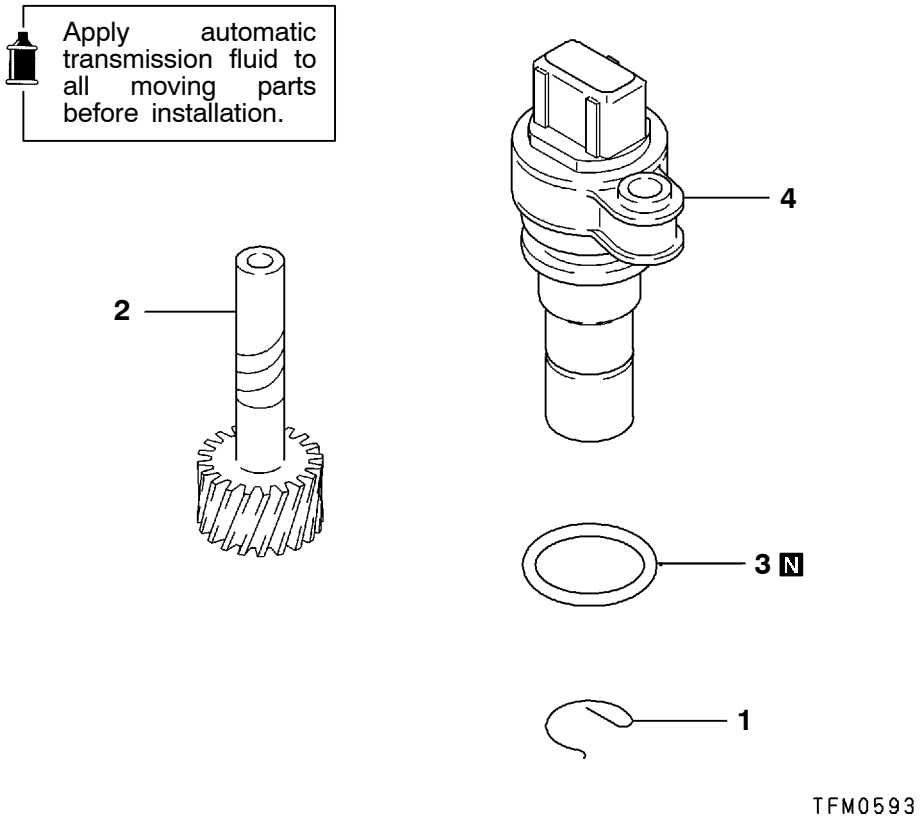

Disassembly steps

1. e-clip
2. Speedometer driven gear
3. O-ring
4. Sleeve

15. DRIVE SHAFT OIL SEAL

23300430035

DISASSEMBLY AND REASSEMBLY

Lubricate all internal parts with automatic transmission fluid during reassembly.

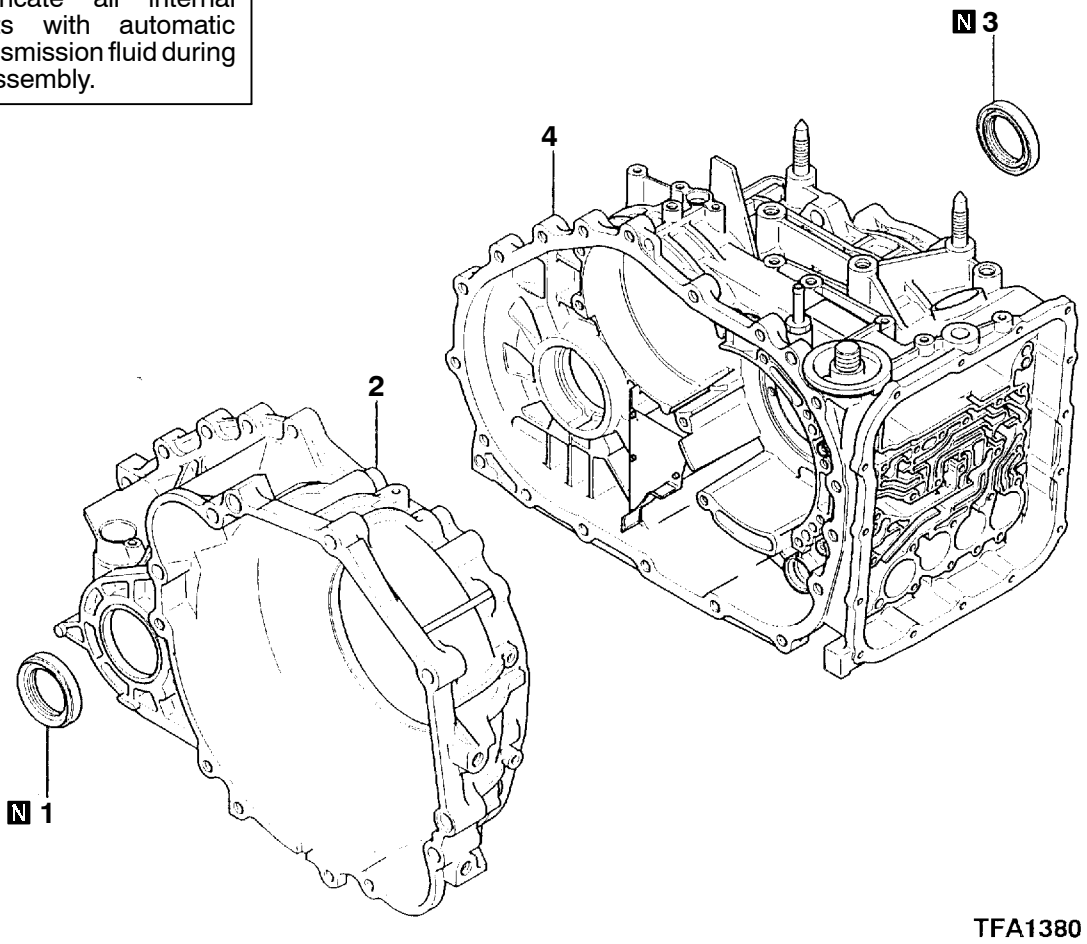

Disassembly steps

▶A◀ 1. Oil seal
2. Torque converter housing
▶B◀ 3. Oil seal
4. Transmission case

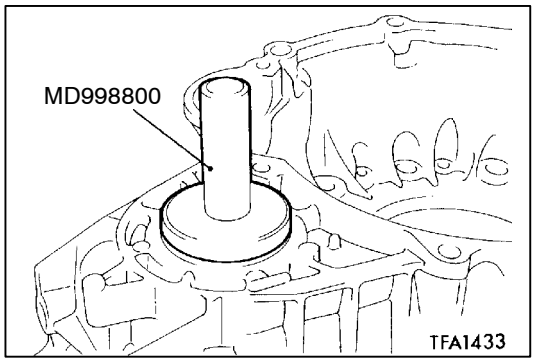

REASSEMBLY SERVICE POINT

▶A◀ OIL SEAL INSTALLATION

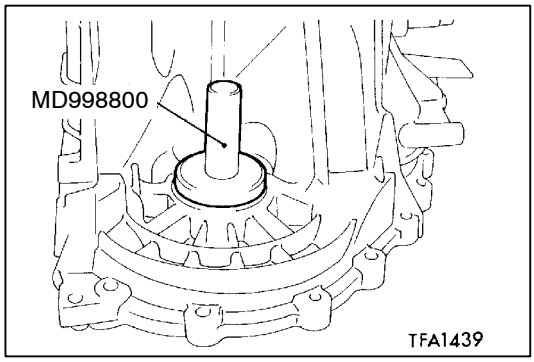

▶B◀ OIL SEAL INSTALLATION

Service Bulletins

Click on the applicable bookmark to select the Service Bulletin.

SERVICE BULLETIN

MITSUBISHI MOTORS

QUALITY INFORMATION ANALYSIS
OVERSEAS SERVICE DEPT. MITSUBISHI MOTORS CORPORATION

SERVICE BULLETIN	**No.:** MSB-99E23-002	
	Date: 1999-12-15	
Subject:	CHANGE IN TRANSFER DRIVE GEAR DISASSEMBLY/REASSEMBLY PROCEDURE	
Group:	AUTOMATIC TRANSAXLE	**Draft No.:** 99TA532414
INFORMATION	**INTERNATIONAL CAR ADMINISTRATION OFFICE**	T.NITTA - PROJECT LEADER AFTER SALES SERVICE & CS PROMOTION

<Model>	<M/Y>
(EC) COLT (CJ0A)	98-10
(EC) LANCER (CK0A)	98-10
(EC) CARISMA	98-10
(EC) GALANTE (EA0)	98-10
(EC) SPACE RUNNER (N61W)	98-10
(EC) SPACE WAGON (N84W)	98-10

1. Description:

With change in shape of the lock nut, the transfer drive gear has been changed to that which cannot be disassembled. Accordingly, the applicable transfer drive gear service procedure has been added.

2. Applicable Manuals:

Manual	Pub. No.	Language	Page(s)
Front Wheel Drive Automatic Transmission (E-W) Workshop Manual	PWEE9514-D	(English)	23A-11-1
	PWES9515-D	(Spanish)	
	PWEF9516-D	(French)	
	PWEG9517-D	(German)	
	PWED9518-D	(Dutch)	
	PWEW9519-D	(Swedish)	

3. Effective Date:

From January 1998
Effective Model: GM6015

4. Details:

Shape of lock nut

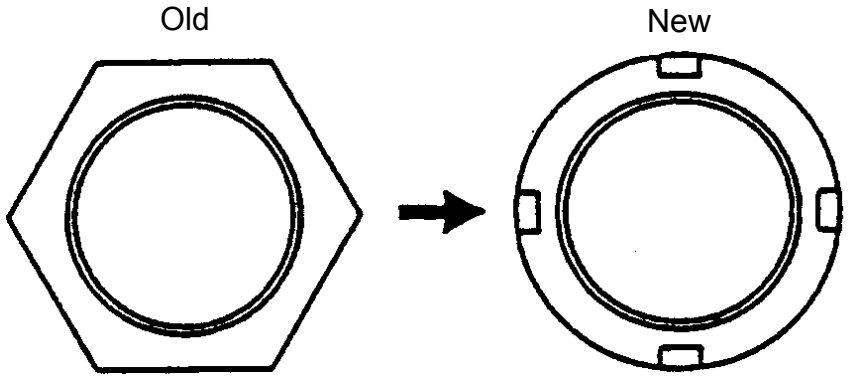

11. TRANSFER DRIVE GEAR <F4A41, F4A42>

DISASSEMBLY AND REASSEMBLY

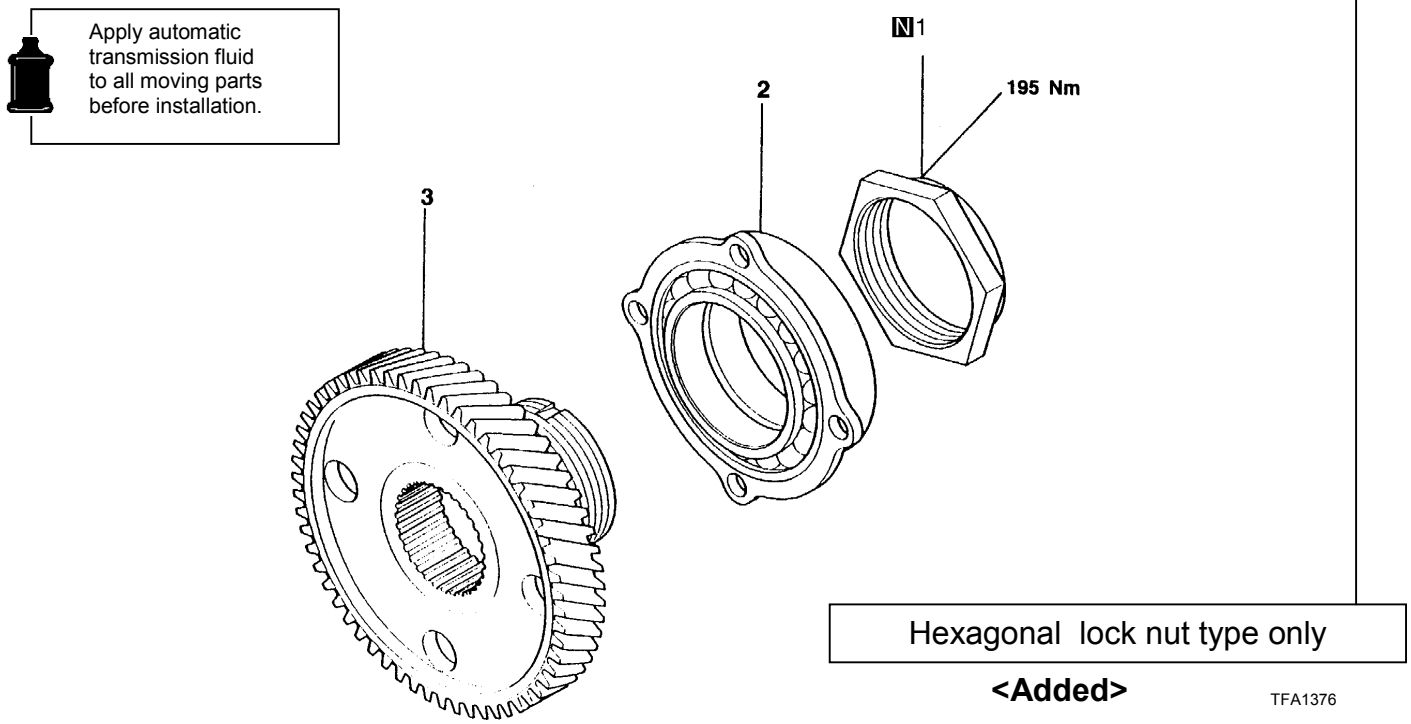

Disassembly steps

◀A▶ ▶B◀ 1. Lock nut
◀B▶ ▶A◀ 2. Transfer drive gear bearing
3. Transfer drive gear

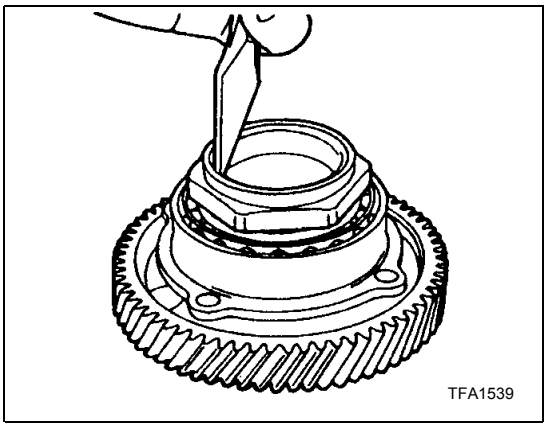

DISSASEMBLY SERVICE POINTS

◀A▶ LOCK NUT REMOVAL

(1) Pull up the turning stopper of the lock nut.

SERVICE BULLETIN

MITSUBISHI MOTORS

QUALITY INFORMATION ANALYSIS
OVERSEAS SERVICE DEPT. MITSUBISHI MOTORS CORPORATION

SERVICE BULLETIN	**No.:** MSB-99E23-003REV		
	2000-05-31	**<Model>**	**<M/Y>**
Subject:	DELETION OF AUTOMATIC TRANSMISSION EXTERNAL OIL FILTER	ALL MODELS	99-99
Group:	AUTOMATIC TRANSMISSION	**Draft No.:** 99AT610110	
INFORMATION	**INTERNATIONAL CAR ADMINISTRATIO OFFICE**	T.NITTA - PROJECT LEADER AFTER SALES SERVICE & CS PROMOTION	

1. Description:

On the front engine front wheel drive (E-W) cars, the external oil filter for the automatic transmission has been deleted.
Deletion of the external oil filter makes it unnecessary to regularly replace the oil filter.

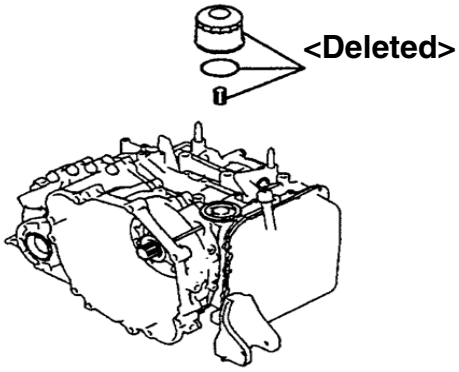

2. Applicable Models:

F4A41, F4A42, F4A51, F5A42, F5A51
W4A41, W4A42, W4A51, W5A42, W5A51

3. Effective Date:

From October 5, 1999 (KN0310) **<revised>**

SERVICE BULLETIN

MITSUBISHI MOTORS

QUALITY INFORMATION ANALYSIS
OVERSEAS SERVICE DEPT. MITSUBISHI MOTORS CORPORATION

SERVICE BULLETIN		No.: MSB-99E23-503		
		Date: 1999-12-15	<Model>	<M/Y>
Subject:	CHANGES IN AND CORRECTION TO FRONT WHEEL DRIVE A/T WORKSHOP MANUAL		(EC) SPACE WAGON (N84W)	99-10 99-10
Group:	AUTOMATIC TRANSAXLE	Draft No.: 99TA532317	(EC) GALANT (EA0)	
CORRECTION	INTERNATIONAL CAR ADMINISTRATION OFFICE	T.NITTA - PROJECT LEADER AFTER SALES SERVICE & CS PROMOTION		

1. Description:

On the cars equipped with automatic transmission with one-way clutch, the following modifications have been made.

Modification A: The 1999 transmission models (F4A42 with one way clutch for 2.4-liter and 2.5 liter engine equipped cars) have been added.

Modification B: On some models equipped with the F4A42 transmission, the service procedures for the low-reverse brake have been changed due to addition of the one-way clutch.
(1) The special tool has been added.
(2) The transmission diasassembly/reassembly procedures have been changed.
(3) The overdrive planetary carrier disassembly/reassembly procedures have been changed to the planetary carrier assembly reassembly/disassembly procedures

Modification C: On all the models equipped with the F4A51 transmission, the service procedures for the low-reverse brake have been corrected due to addition of the one-way clutch.
(1) The transmission disassembly/ reassembly procedures have been corrected.
(2) The overdrive planetary carrier disassembly/reassembly procedures have been corrected to the planetary carrier assembly reassembly/disassembly procedures

Modification D: On some models equipped with the F4A42 transmission, the number of the transfer drive gear mounting bolts has been changed from 4 to 7.

Modification E: On all the models equipped with the F4A51 transmission, the four bolts for mounting the transfer drive gear have been corrected to the eight bolts.

Modification F: On some models equipped with the F4A42 transmission, the transfer drive gear tightening torque has been changed from 19 Nm to 34 Nm.

2. Applicable Manuals:

Manual	Pub. No.	Language	Page(s)
Front Wheel Drive Automatic Transmission (E-W) Workshop Manual	PWEE9514-D	(English)	23A-1-2, 23A-1-9, 23A-2-4, 23A-3-4, 23A-3-5d,23A-3-13, 23A-3-15, 23A-3-17, 23A-3-21, 23A-3-23, 23A-7-1
	PWES9515-D	(Spanish)	
	PWEF9516-D	(French)	
	PWEG9517-D	(German)	
	PWED9518-D	(Dutch)	
	PWEW9519-D	(Swedish)	

3. Effective Date:

- All models of Space Wagon (N84W):
  From the first production car for Modifications B, D and F.

- From December 1, 1998 for Modifications B.
  Effective Model: JD2563
  From January 1, 1998 for Modifications D and F.
  Effective Model: GM6015

4. Details:

Front Wheel Drive Automatic Transmission (E-W) Workshop Manual, page 1-14

Modification B: On some models equipped with the F4A42 transmission, the service procedures for the low-reverse brake have been changed due to addition of the one-way clutch.

- The special tool has been added.

Tool	Number	Name	Use
	MD998823	Installer adapter (48)	Installation of output shaft tape roller bearing <F4A41, F4A42>, transfer drive gear <F4A41, F4A42>.
	MD998824	Installer adapter (50)	Installation of transfer drive gear <F4A51>, differential taper roller bearing <F4A51>.
	MD998827	Installer adapter (56)	Installation of output shaft tape roller bearing <F4A51>.
	MD998829	Installer adapter (60)	Installation of transfer drive gear <F4A41, F4A42>.
	MD998907	Spring compressor	Removal and installation of underdrive clutch snap ring.
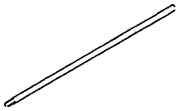	MD998913	Dial gauge extension	Measurement of low-reverse brake and second brake end plays.
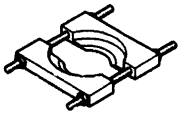	MD998917	Bearing remover	Removal of output shaft taper roller bearing.
	MD998924	Spring compressor retainer	• Removal and installation of low-reverse brake snap ring. • Measurement of underdrive clutch and overdrive clutch end plays.
	MD999590	Spring compressor	Removal and installation of overdrive clutch snap ring.
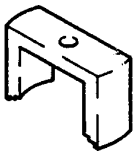	MD998903	Spring compressor	Removal and installation of one-way clutch inner race snap ring <F4A42>.

<Added>

Modification B: On some models equipped with the F4A42 transmission, the service procedures for the low-reverse brake have been changed due to addition of the one-way clutch.

Modification F: On some models equipped with the F4A42 transmission, the transfer drive gear tightening torque has been changed from 19 Nm to 34 Nm.

No. of Brake Discs and Plates

Brake	Model	Brake disc	Brake plate
Low-reverse	F4A41	4	3
	F4A42	5	4
Second brake	F4A41	2	1
	F4A42	3	2

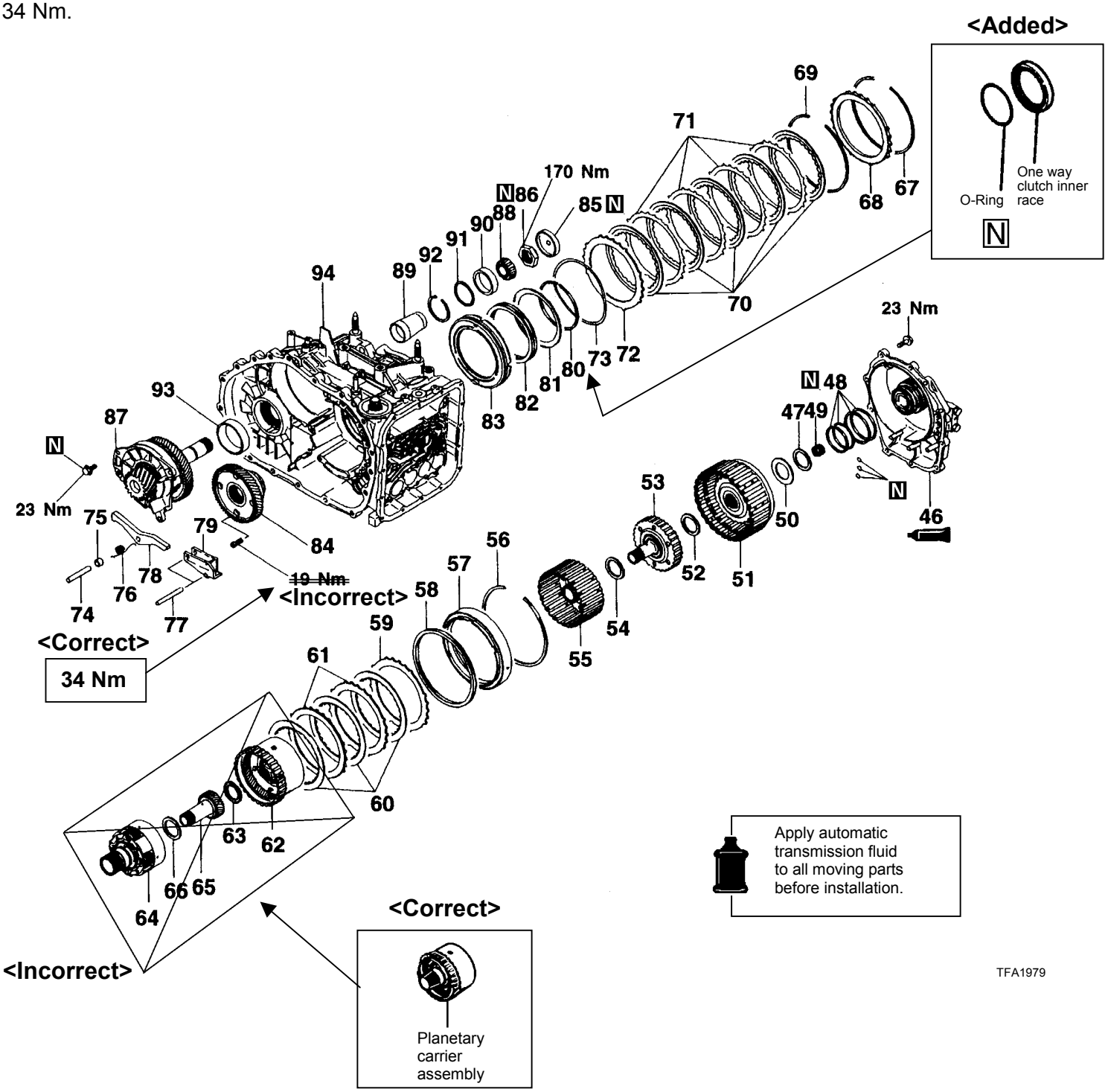

Modification C: On all the models equipped with the F4A51 transmission, the service procedures for the low-reverse brake have been corrected due to addition of the one-way clutch.

- The transmission disassembly/reassembly procedures
- have been corrected.
- The overdrive planetary carrier disassembly/reassembly procedures have been corrected to the planetary carrier assembly reassembly/disassembly procedures.

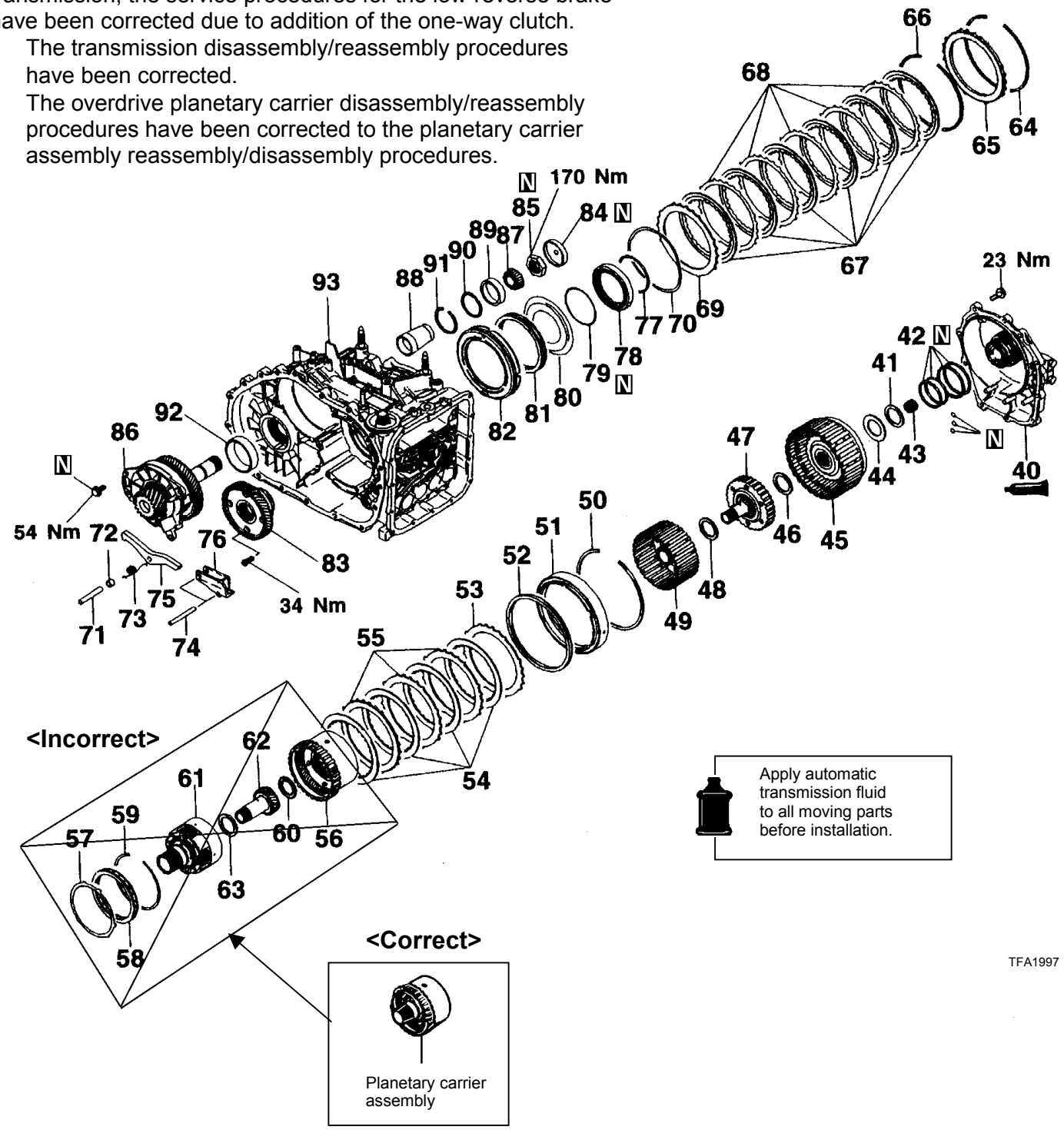

Modification B: On some models equipped with the F4A42 transmission, the service procedures for the low-reverse brake have been changed due to addition of the one-way clutch.
Modification C: On some models equipped with the F4A51 transmission, the service procedures for the low-reverse brake have been changed due to addition of the one-way clutch.

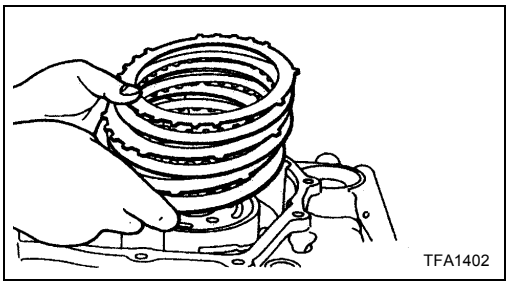

(45) Remove the pressure plate, brake discs and brake plate(s).

No. of brake discs and plates

Model	Brake disc	Brake plate	Pressure plate
F4A41	2	1	1
F4A42	3	2	1
F4A51	4	3	1

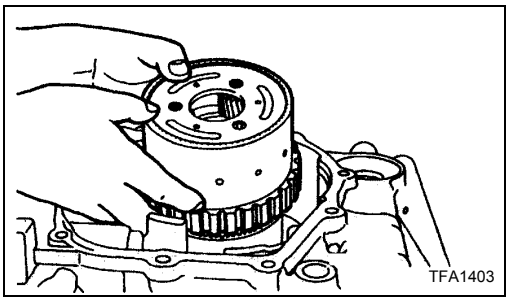

(46) Remove the ~~overdrive planetary carrier~~. **<Incorrect>**

Planetary carrier assembly

<Correct>

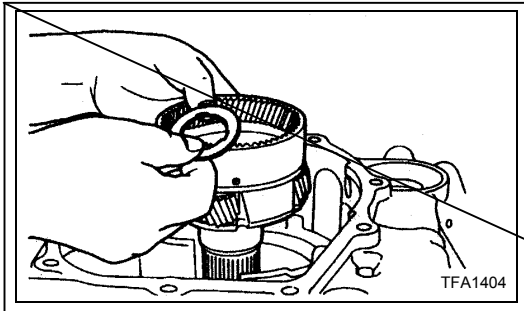

(47) Remove the output planetary carrier and the thrust bearing #4.

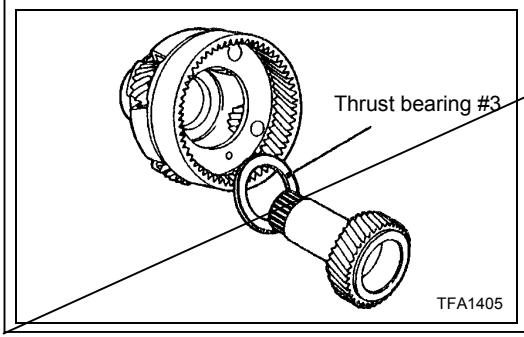

(48) Remove the underdrive sun gear and the thrust bearing #3 from the output planetary carrier.

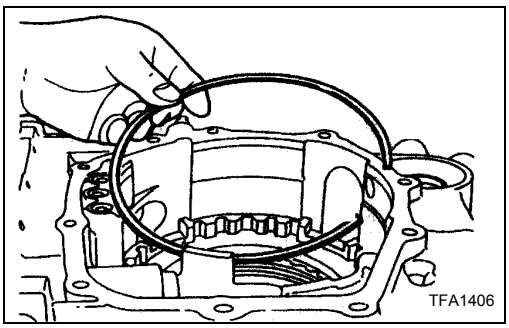

(49) Remove the snap ring.

<Deleted>

Modification B: On some models equipped with the F4A42 transmission, the service procedures for the low-reverse brake have been changed due to addition of the one-way clutch.
Modification D: On some models equipped with the F4A42 transmission, the number of the transfer drive gear mounting bolts has been changed from 4 to 7.

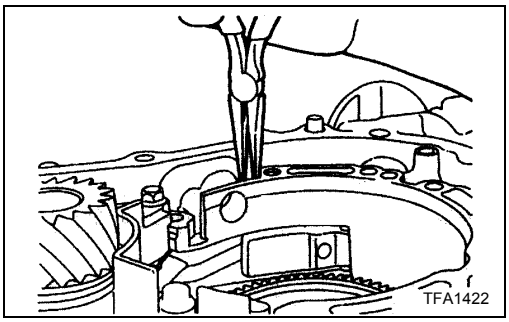

(55) Remove the two parking roller support shaft, and then remove the parking pawl case and parking roller support.

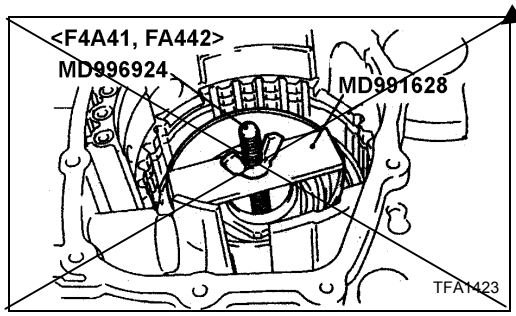

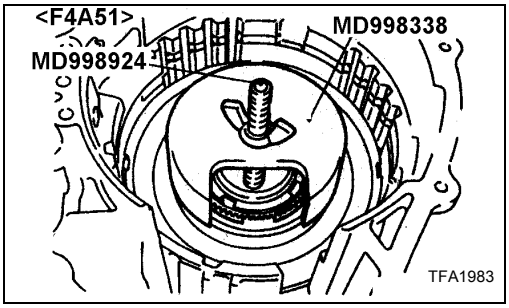

<Incorrect> <Deleted>

(56) Use the special tool to remove the snap ring.
(57) Remove the one-way clutch inner race ~~<F4A51>~~, O-ring ~~<F4A51>~~, spring retainer, return spring and the low-reverse brake piston.

<Correct>

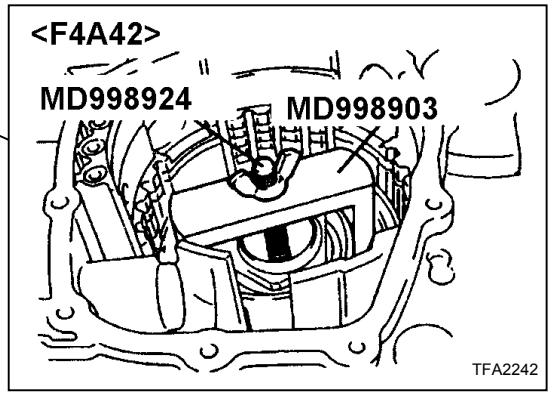

7 <Correct>

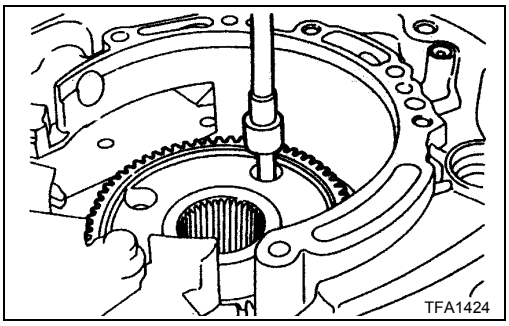

(58) Remove the transfer drive gear mounting bolts (~~4~~ pieces – F4A41 • F4A42, 8 pieces – F4A51). <Incorrect>

NOTE ~~<F4A51>~~ <Deleted>
Remove ~~four~~ mounting bolts. Then, turn the gear 1/8 turn (45°) and remove the remaining ~~four~~ bolts.

<Incorrect> <Incorrect>

Four or three <Correct>

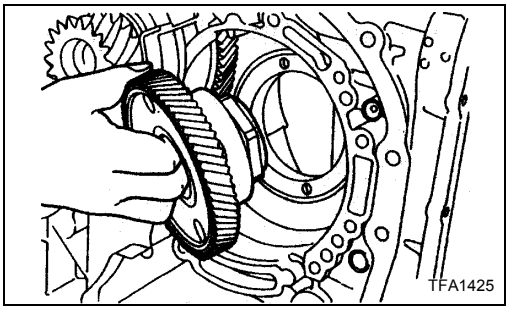

(59) Remove the transfer drive gear.

Modification B: On some models equipped with the F4A42 transmission, the service procedures for the low-reverse brake have been changed due to addition of the one-way clutch.

REASSEMBLY

Caution

1. **Never reuse the gasket, O-ring, oil seal etc. Always replace with a new one when reassembling.**
2. **Never use grease other than blue petrolatum jelly and white Vaseline.**
3. **Apply ATF to friction components, rotating parts, and sliding parts before installation. Immerse a new clutch disc or brake disc in ATF for at least two hours before assembling them.**
4. **Never apply sealant or adhesive to gaskets.**
5. **When replacing a bushing, replace the assembly which it belongs to.**
6. **Never use any cloth gloves or any rags during reassembly. Use nylon cloth or paper towels if you need to use something.**
7. **Change the oil in the cooler system.**

<Correct>

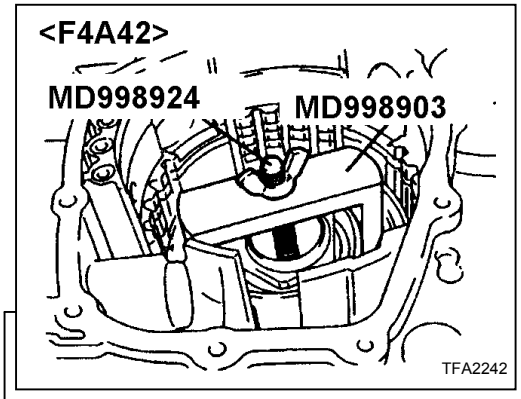

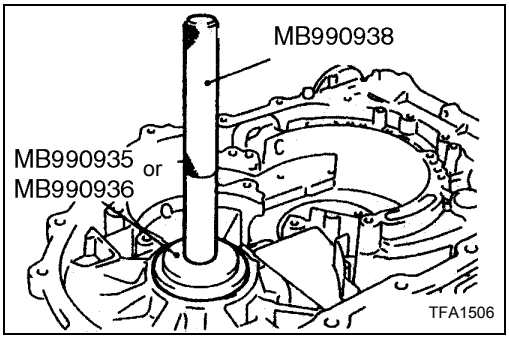

(1) Use the special tool to tap the differential bearing outer race in the transmission case. <F4A42, F4A51>

Model	Special tools No.
F4A42	MB990935, MB990938
F4A51	MB990936, MB990938

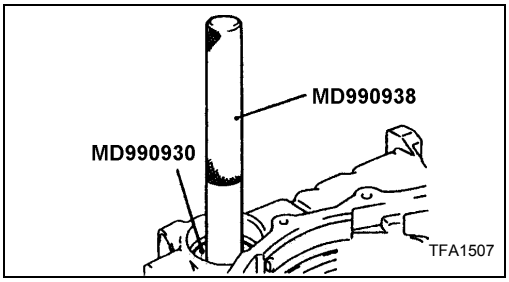

(2) Use the special tool to tap the differential bearing outer race in the transmission case.
(3) Install the used spacer and snap ring.

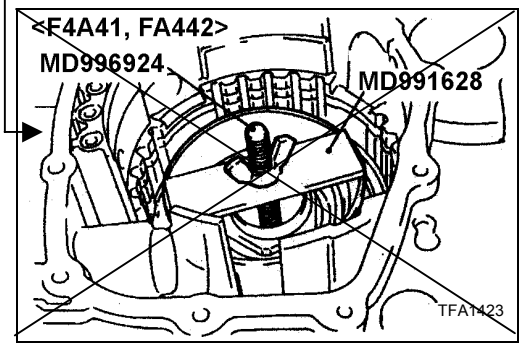

<Incorrect>

(4) Install the low-reverse brake piston, return spring and one-way clutch inner race ~~<F4A51>~~ transfer drive gear ~~<F4A51>~~ , O-ring ~~<F4A51>~~, spring retainer.
(5) Use the special tools to install the snap ring.

<Deleted>

<Deleted>

Modification B: On some models equipped with the F4A42 transmission, the service procedures for the low-reverse brake have been changed due to addition of the one-way clutch.
Modification C: On all the models equipped with the F4A51 transmission, the service procedures for the low-reverse brake have been changed due to addition of the one-way clutch.
Modification D: On some models equipped with the F4A42 transmission, the number of the transfer drive gear mounting bolts has been changed from 4 to 7.
Modification E: On some models equipped with the F4A51 transmission, the four bolts for mounting the transfer drive gear have been corrected to the eight bolts.

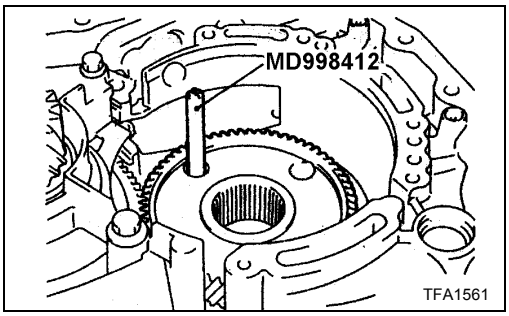

(22) Use the special tool to install the transfer drive gear.

<Correct>

Seven mounting bolts (F4A42) and eight mounting bolts (F4A51)

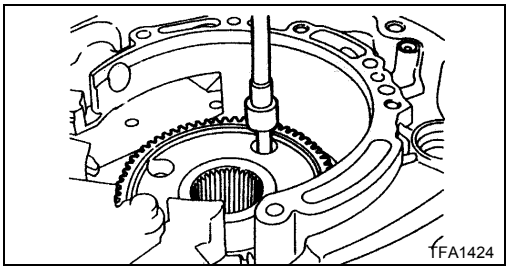

(23) Tighten the ~~four mounting bouts~~ of the transfer drive gear to the specified torque. **<Incorrect>**

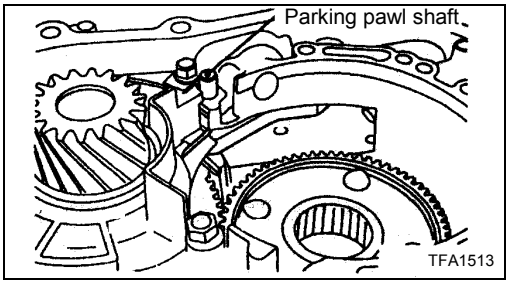

(24) Install the parking pawl, spacer, and spring. Then install the parking pawl shaft.

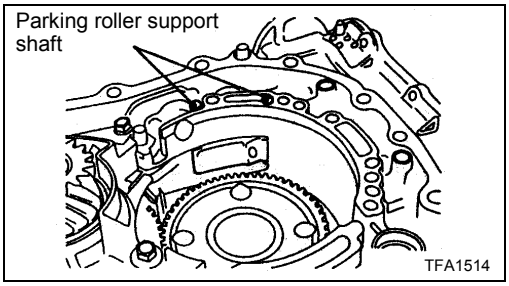

(25) Install the parking roller support, and then the two parking roller support shafts.

<Deleted>

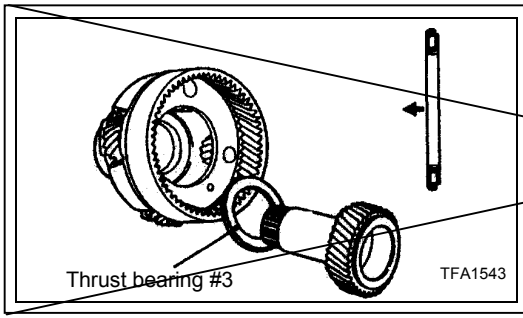

(26) Install the underdrive sun gear and thrust bearing #3 to the output planetary carrier.

Caution
Be careful about the installation direction of the thrust bearing.

Modification B: On some models equipped with the F4A42 transmission, the service procedures for the low-reverse brake have been changed due to addition of the one-way clutch.
Modification C: On all the models equipped with the F4A51 transmission, the service procedures for the low-reverse brake have been changed due to addition of the one-way clutch.

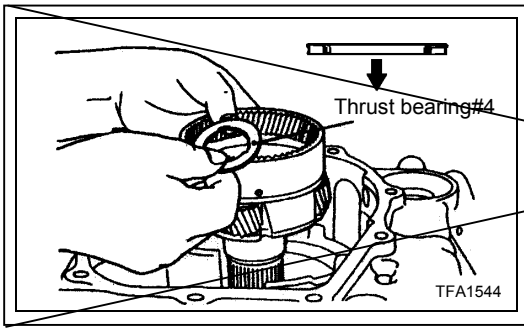

(27) Install the output planetary carrier and thrust bearing #4.

Caution
Be careful about the installation direction of the thrust bearing.

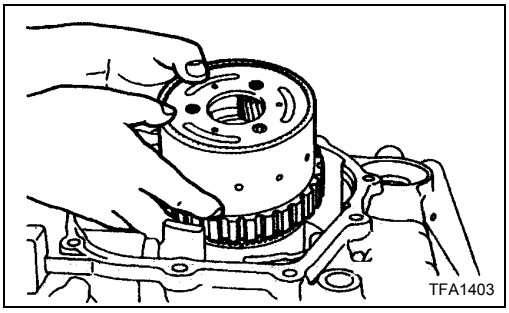

(28) Install the ~~overdrive planetary drive.~~ **<Incorrect>**

<Deleted>

Planetary carrier assembly

<Correct>

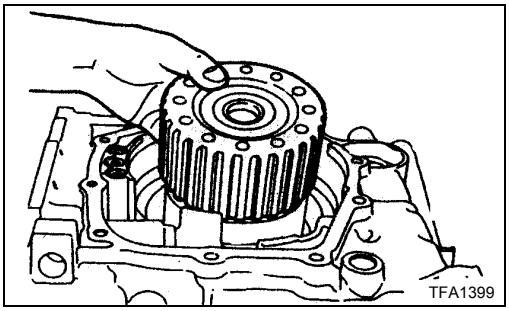

(29) Install the planetary reverse sun gear.

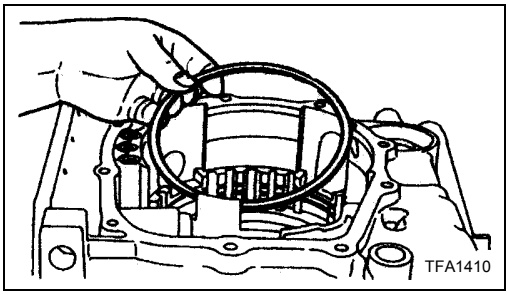

(30) Install the wave spring.

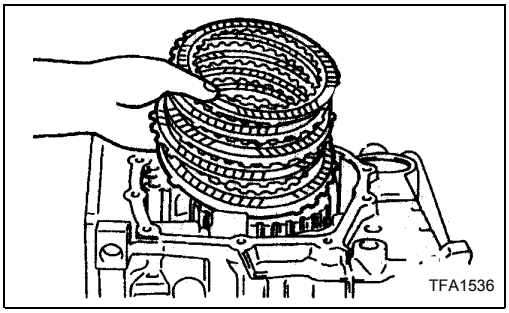

(31) Install the pressure plate, brake disc, and brake plate.

Number of brake discs and plates

Model	Brake disc	Brake plate	Pressure plate
F4A41	4	3	1
F4A42-1	5	4	1
F4A42-2, F4A51	6	5	1

Modification B: On some models equipped with the F4A42 transmission, the service procedures for the low-reverse brake have been changed due to addition of the one-way clutch.
Modification C: On all the models equipped with the F4A51 transmission, the service procedures for the low-reverse brake have been changed due to addition of the one-way clutch.

7. OVERDRIVE PLANETARY CARRIER

DISASSEMBLY AND REASSEMBLY

23302150014

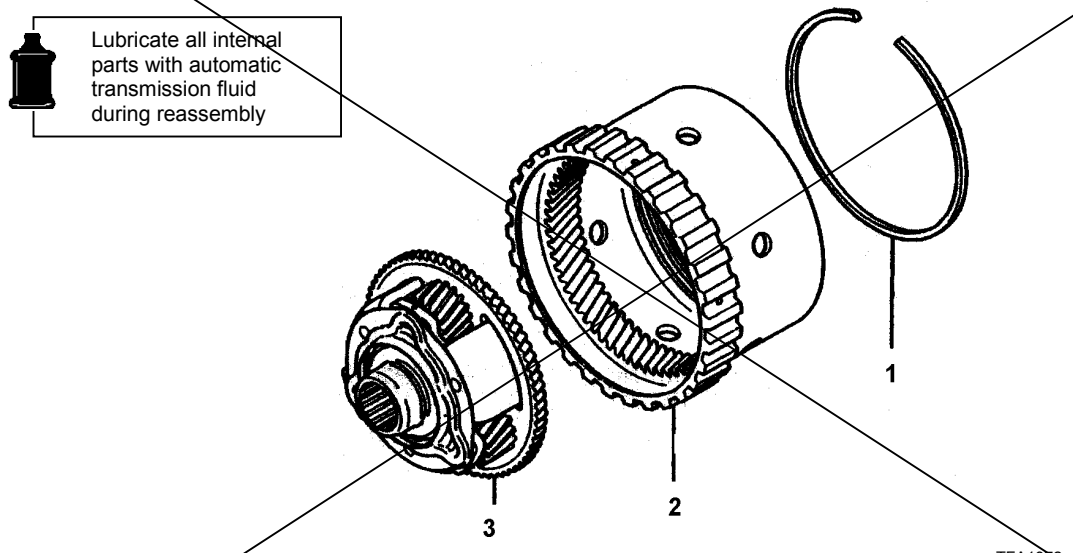

Disassembly steps

1. Snap ring
2. Overdrive planetary carrier
3. Overdrive annulus gear

<Replace by the following page>

1999 transmission models (F4A42 with one-way clutch for 2.4-liter and 2.5-liter engine equipped cars) added.

7. PLANETARY CARRIER ASSEMBLY DISASSEMBLY AND REASSEMBLY

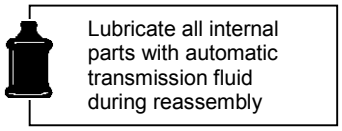

Lubricate all internal parts with automatic transmission fluid during reassembly

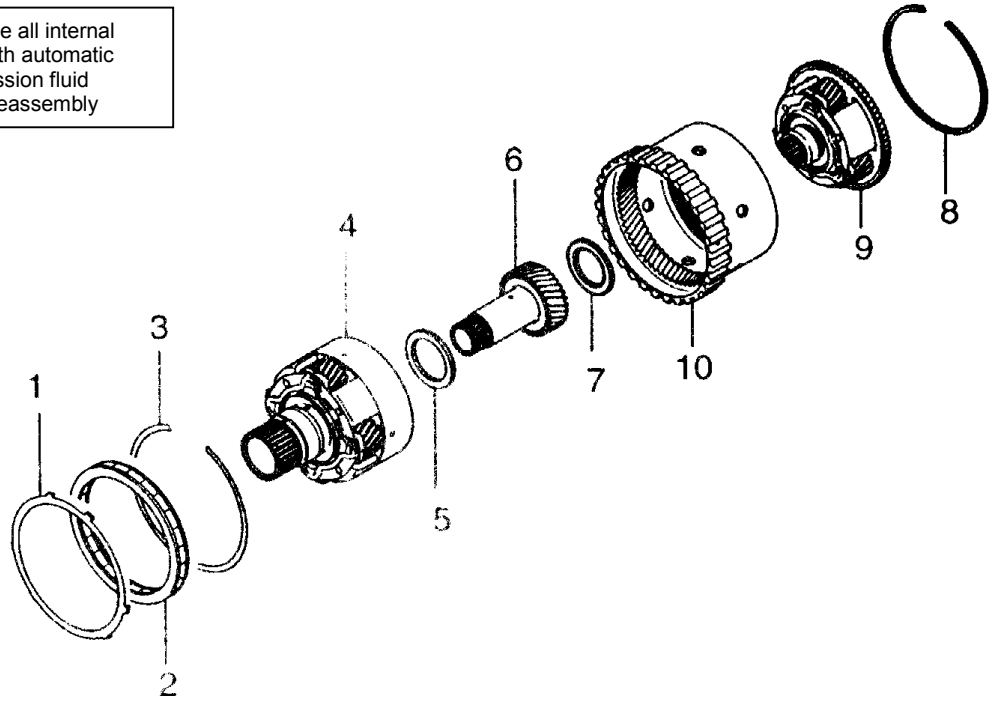

Disassembly steps

1. Stopper plate
2. ▶B◀ One-way clutch
3. Snap ring
4. Output planetary carrier
5. ▶A◀ Thrust bearing #3
6. Under drive sun gear
7. ▶A◀ Thrust bearing #4
8. Snap ring
9. Over drive planetary carrier
10. Over drive annulus gear

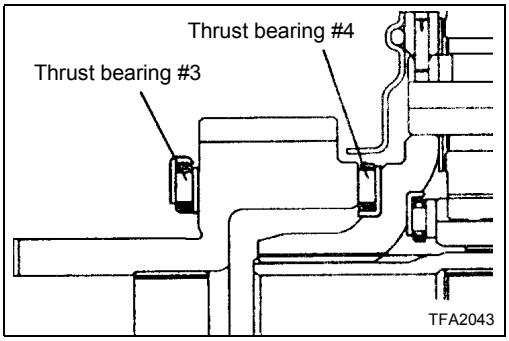

REASSEMBLY SERVICE POINT

▶A◀ THRUST BEARING #3 AND THRUST BEARING #4 INSTALLATION

Check the installation direction of thrust bearings number 3 and 4, and install them as shown.

Caution

Be careful about the installation direction of the thrust bearings

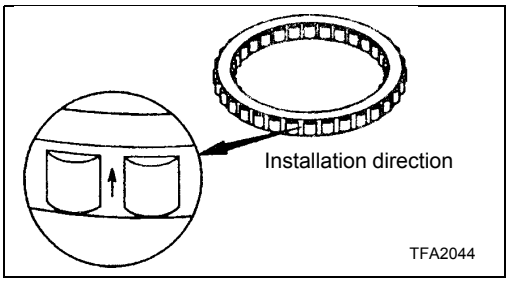

▶B◀ ONE-WAY CLUTCH INSTALLATION

Insert the one-way clutch into the over drive annulus gear so that the arrow points to the output planetary carrier side.

<Correct>

SERVICE BULLETIN

MITSUBISHI MOTORS

QUALITY INFORMATION ANALYSIS
OVERSEAS SERVICE DEPT. MITSUBISHI MOTORS CORPORATION

SERVICE BULLETIN	**No.:** MSB-00E23-002		
	Date: 2001-02-28	**<Model>**	**<M/Y>**
Subject:	ADOPTION OF SOLENOID VALVE HARNESS WITH INTEGRAL TYPE OIL TEMPERATURE SENSOR	ALL	01-01
Group:	AUTOMATIC TRANSMISSION	**Draft No.:** 00AT600310	
INFORMATION	**INTERNATIONAL CAR ADMINISTRATION OFFICE**	T.MASAKI – MANAGER TECHNICAL SERVICE PLANNING	

1. Description:

For the automatic transmission on the front-engine front-wheel (E-W) drive cars, the solenoid valve harness with a separate type oil temperature sensor has been changed to that with an integral type oil temperature.

2. Applicable Automatic Transmission Models:

F4A41, F4A42, F4A51, F5A42, F5A51,
W4A41, W4A42, W4A51, W5A42, W5A51

3. Interchangeability:

Not interchangeable

4. Effective Date (Effective Model):

From September 10, 2000

5. Change Details: